TinyLogic UHS 2-Input Non-Inverting Multiplexer

NC7SZ157

Description

The NC7SZ157 is a single, high performance, 2−to−1 CMOS non−inverting multiplexer from **onsemi**'s Ultra−High Speed series of TinyLogic. The device is fabricated with advanced CMOS technology to achieve ultra high speed with high output drive while maintaining low static power dissipation over a broad V_{CC} operating range. The device is specified to operate over the 1.65 V to 5.5 V V_{CC} operating range. The inputs and outputs are high impedance when V_{CC} is 0 V. Inputs tolerate voltages up to 5.5 V independent of V_{CC} operating range.

Features

- Broad V_{CC} Operating Range: 1.65 V to 5.5 V
- Ultra High−Speed
- Power Down High−Impedance Inputs / Outputs
- Over−Voltage Tolerance Inputs Facilitate 5 V to 3 V Translation
- Proprietary Noise / EMI Reduction Circuitry
- Ultra−Small MicroPak™ Packages
- Space−Saving SC−88 Package
- These Devices are Pb−Free, Halogen Free/BFR Free and are RoHS Compliant

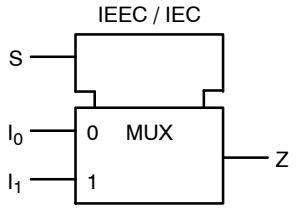

Figure 1. Logic Symbol

MARKING DIAGRAMS

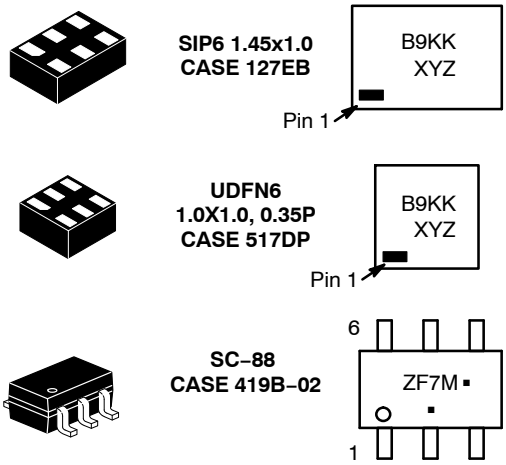

B9, ZF7	= Specific Device Code
KK	= 2−Digit Lot Run Traceability Code
XY	= 2−Digit Date Code Format
Z	= Assembly Plant Code
M	= Date Code*
▪	= Pb−Free Package

(Note: Microdot may be in either location)

*Date Code orientation and/or position may vary depending upon manufacturing location.

ORDERING INFORMATION

See detailed ordering, marking and shipping information in the package dimensions section on page 6 of this data sheet.

© Semiconductor Components Industries, LLC, 2000

Pin Configurations

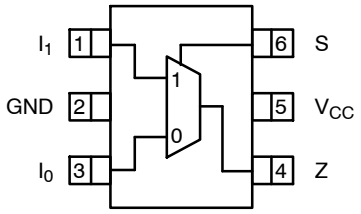

Figure 2. SC−88 (Top View)

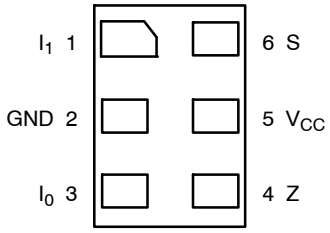

Figure 3. MicroPak (Top Through View)

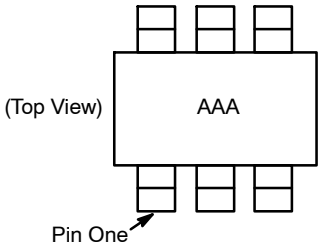

NOTES:
1. AAA represents product code top mark (*see Ordering Information*).
2. Orientation of top mark determines pin one location.
3. Reading the top mark left to right, pin one is the lower left pin.

Figure 4. Pin 1 Orientation

PIN DEFINITIONS

Pin # SC−88	Pin # MicroPak	Name	Description
1	1	I_1	Data Input
2	2	GND	Ground
3	3	I_0	Data Input
4	4	Z	Output
5	5	V_{CC}	Supply Voltage
6	6	S	Control Input

FUNCTION TABLE

Inputs			Output
S	**I_1**	**I_0**	**$Z = (I_0) \cdot (\overline{S}) + (I_1) \cdot (S)$**
L	X	L	L
L	X	H	H
H	L	X	L
H	H	X	H

H = HIGH Logic Level
L = LOW Logic Level
X = Don't Care

ABSOLUTE MAXIMUM RATINGS

Symbol	Parameter		Min	Max	Unit
V_{CC}	Supply Voltage		−0.5	6.5	V
V_{IN}	DC Input Voltage		−0.5	6.5	V
V_{OUT}	DC Output Voltage		−0.5	6.5	V
I_{IK}	DC Input Diode Current	V_{IN} < 0 V	–	−50	mA
I_{OK}	DC Output Diode Current	V_{OUT} < 0 V	–	−50	mA
I_{OUT}	DC Output Current		–	±50	mA
I_{CC} or I_{GND}	DC V_{CC} or Ground Current		–	±50	mA
T_{STG}	Storage Temperature Range		−65	+150	°C
T_J	Junction Temperature Under Bias		–	+150	°C
T_L	Junction Lead Temperature (Soldering, 10 Seconds)		–	+260	°C
P_D	Power Dissipation in Still Air	SC−88	–	332	mW
		MicroPak−6	–	812	
		MicroPak2™−6	–	812	
ESD	Human Body Model, JEDEC: JESD22−A114		–	4000	V
	Charge Device Model, JEDEC: JESD22−C101		–	2000	

Stresses exceeding those listed in the Maximum Ratings table may damage the device. If any of these limits are exceeded, device functionality should not be assumed, damage may occur and reliability may be affected.

RECOMMENDED OPERATING CONDITIONS

Symbol	Parameter	Conditions	Min	Max	Unit
V_{CC}	Supply Voltage Operating		1.65	5.5	V
	Supply Voltage Data Retention		1.50	5.5	
V_{IN}	Input Voltage		0	5.5	V
V_{OUT}	Output Voltage		0	V_{CC}	V
T_A	Operating Temperature		−40	+85	°C
t_r, t_f	Input Rise and Fall Times	V_{CC} at 1.8 V ±0.15 V, 2.5 V ±0.2 V	0	20	ns/V
		V_{CC} at 3.3 V ±0.3 V	0	10	
		V_{CC} at 5.0 V ±0.5 V	0	5	
θ_{JA}	Thermal Resistance	SC−88	–	377	°C/W
		MicroPak−6	–	154	
		MicroPak2−6	–	154	°C/W

Functional operation above the stresses listed in the Recommended Operating Ranges is not implied. Extended exposure to stresses beyond the Recommended Operating Ranges limits may affect device reliability.

DC ELECTRICAL CHARACTERISTICS

Symbol	Parameter	V_{CC} (V)	Conditions		T_A = +25°C			T_A = −40 to +85°C		Unit
					Min	Typ	Max	Min	Max	
V_{IH}	HIGH Level Input Voltage	1.65 to 1.95			0.65 V_{CC}	–	–	0.65 V_{CC}	–	V
		2.30 to 5.50			0.70 V_{CC}	–	–	0.70 V_{CC}	–	
V_{IL}	LOW Level Input Voltage	1.65 to 1.95			–	–	0.35 V_{CC}	–	0.35 V_{CC}	V
		2.30 to 5.50			–	–	0.30 V_{CC}	–	0.30 V_{CC}	
V_{OH}	HIGH Level Output Voltage	1.65	V_{IN} = V_{IH} or V_{IL}	I_{OH} = −100 μA	1.55	1.65	–	1.55	–	V
		2.30			2.20	2.30	–	2.20	–	
		3.00			2.90	3.00	–	2.90	–	
		4.50			4.40	4.50	–	4.40	–	
		1.65		I_{OH} = −4 mA	1.29	1.52	–	1.29	–	
		2.30		I_{OH} = −8 mA	1.90	2.15	–	1.90	–	
		3.00		I_{OH} = −16 mA	2.40	2.80	–	2.40	–	
		3.00		I_{OH} = −24 mA	2.30	3.68	–	2.30	–	
		4.50		I_{OH} = −32 mA	3.90	4.20	–	3.80	–	
V_{OL}	LOW Level Output Voltage	1.65	V_{IN} = V_{IH} or V_{IL}	I_{OL} = 100 μA	–	0	0.10	–	0.10	V
		2.30			–	0	0.10	–	0.10	
		3.00			–	0	0.10	–	0.10	
		4.50			–	0	0.10	–	0.10	
		1.65		I_{OL} = 4 mA	–	0.08	0.24	–	0.24	
		2.30		I_{OL} = 8 mA	–	0.10	0.30	–	0.30	
		3.00		I_{OL} = 16 mA	–	0.15	0.40	–	0.40	
		3.00		I_{OL} = 24 mA	–	0.22	0.55	–	0.55	
		4.50		I_{OL} = 32 mA	–	0.22	0.55	–	0.55	
I_{IN}	Input Leakage Current	1.65 to 5.5		V_{IN} = 5.5 V, GND	–	–	±0.1	–	±1	μA
I_{OFF}	Power Off Leakage Current	0		V_{IN} or V_{OUT} = 5.5 V	–	–	1.0	–	10	μA
I_{CC}	Quiescent Supply Current	1.65 to 5.50		V_{IN} = 5.5 V, GND	–	–	1.0	–	10	μA

AC ELECTRICAL CHARACTERISTICS

Symbol	Parameter	V_{CC} (V)	Conditions	T_A = +25°C			T_A = −40 to +85°C		Unit
				Min	Typ	Max	Min	Max	
t_{PLH}, t_{PHL}	Propagation Delay S to Z (Figure 5, 6)	1.80 ±0.15	C_L = 15 pF, R_L = 1 MΩ,	–	6.0	11.5	–	12.0	ns
		2.50 ±0.20		–	3.5	6.1	–	6.5	
		3.30 ±0.30		–	2.6	4.1	–	4.5	
		5.00 ±0.50		–	1.9	3.2	–	3.5	
	Propagation Delay I_n to Z (Figure 5, 6)	1.80 ±0.15	C_L = 15 pF, R_L = 1MΩ,	–	5.9	10.0	–	10.5	
		5.00 ±0.50		–	3.5	5.8	–	6.1	
		3.30 ±0.30		–	2.6	3.9	–	4.2	
		5.00 ±0.50		–	1.9	3.1	–	3.3	
	Propagation Delay S to Z (Figure 5, 6)	3.30 ±0.30	C_L = 50 pF, R_L = 500 Ω,	–	3.2	4.8	–	5.2	
		5.00 ±0.50		–	2.4	3.8	–	4.1	
	Propagation Delay I_n to Z (Figure 5, 6)	3.30 ±0.30	C_L = 50 pF, R_L = 500 Ω,	–	3.2	4.6	–	5.0	
		5.00 ±0.50		–	2.4	3.7	–	4.0	
C_{IN}	Input Capacitance	0.00		–	2	–	–	–	pF
C_{PD}	Power Dissipation Capacitance (Note 4) (Figure 7)	3.30		–	14	–	–	–	pF
		5.00		–	17	–	–	–	

4. C_{PD} is defined as the value of the internal equivalent capacitance which is derived from dynamic operating current consumption (I_{CCD}) at no output loading and operating at 50% duty cycle. C_{PD} is related to I_{CCD} dynamic operating current by the expression: $I_{CCD} = (C_{PD})\ (V_{CC})\ (f_{IN}) + (I_{CC}static)$.

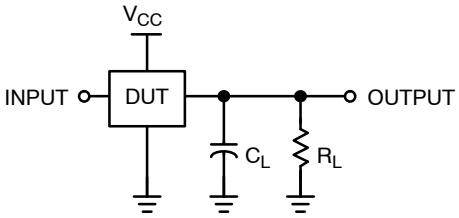

NOTE:
5. C_L includes load and stray capacitance; inputs PRR = 1.0 MHz, t_W = 500 ns.

Figure 5. AC Test Circuit

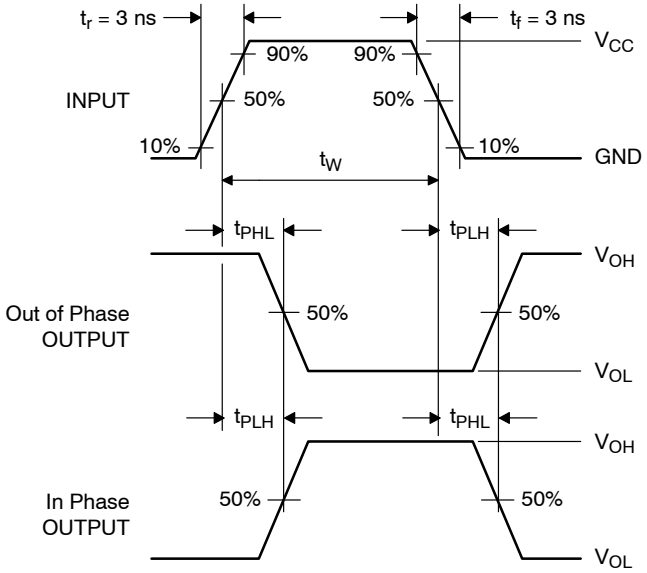

Figure 6. AC Waveforms

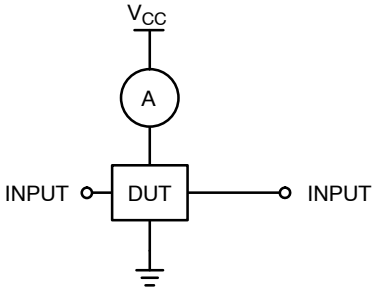

NOTE:
6. Input = AC Waveform; PRR = Variable; Duty Cycle = 50%.

Figure 7. I_{CCD} Test Circuit

DEVICE ORDERING INFORMATION

Device	Top Mark	Packages	Shipping†
NC7SZ157P6X	ZF7	6−Lead SC70, EIAJ SC−88, 1.25 mm Wide	3000 / Tape & Reel
NC7SZ157P6X−L22347	ZF7	6−Lead SC70, EIAJ SC−88, 1.25 mm Wide	3000 / Tape & Reel
NC7SZ157L6X	B9	6−Lead MicroPak, 1.00 mm Wide	5000 / Tape & Reel
NC7SZ157L6X−L22175	B9	6−Lead MicroPak, 1.00 mm Wide	5000 / Tape & Reel
NC7SZ157FHX	B9	6−Lead, MicroPak2, 1x1 mm Body, .35 mm Pitch	5000 / Tape & Reel
NC7SZ157FHX−L22175	B9	6−Lead, MicroPak2, 1x1 mm Body, .35 mm Pitch	5000 / Tape & Reel

†For information on tape and reel specifications, including part orientation and tape sizes, please refer to our Tape and Reel Packaging Specifications Brochure, BRD8011/D.

MicroPak and MicroPak2 are trademarks of Semiconductor Components Industries, LLC dba “**onsemi**” or its affiliates and/or subsidiaries in the United States and/or other countries.

SIP6 1.45X1.0
CASE 127EB
ISSUE O

DATE 31 AUG 2016

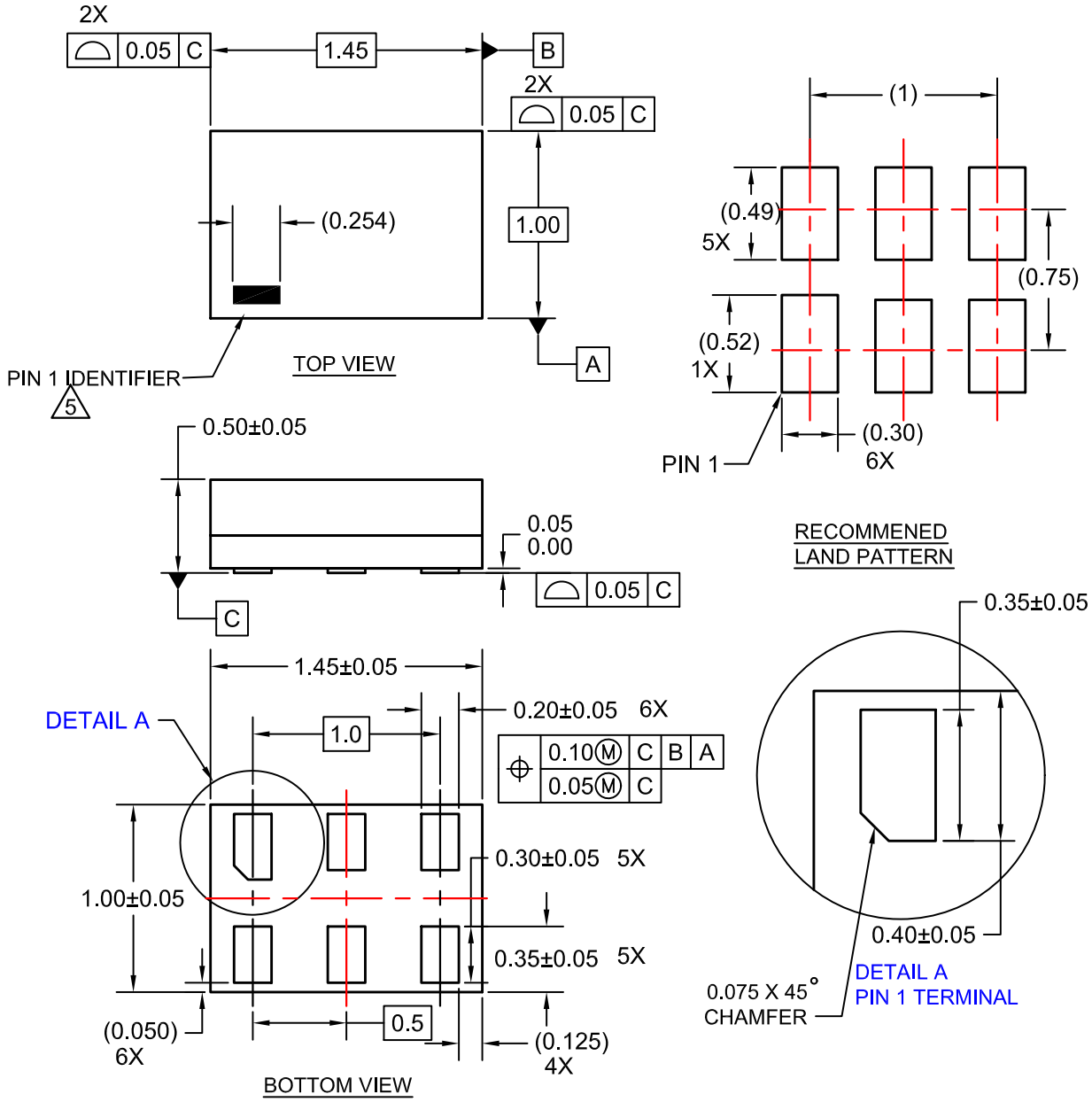

NOTES:

1. CONFORMS TO JEDEC STANDARD MO-252 VARIATION UAAD
2. DIMENSIONS ARE IN MILLIMETERS
3. DRAWING CONFORMS TO ASME Y14.5M-2009
4. PIN ONE IDENTIFIER IS 2X LENGTH OF ANY OTHER LINE IN THE MARK CODE LAYOUT.

DOCUMENT NUMBER:	**98AON13590G**	Electronic versions are uncontrolled except when accessed directly from the Document Repository. Printed versions are uncontrolled except when stamped "CONTROLLED COPY" in red.
DESCRIPTION:	**SIP6 1.45X1.0**	**PAGE 1 OF 1**

ON Semiconductor and ON are trademarks of Semiconductor Components Industries, LLC dba ON Semiconductor or its subsidiaries in the United States and/or other countries. ON Semiconductor reserves the right to make changes without further notice to any products herein. ON Semiconductor makes no warranty, representation or guarantee regarding the suitability of its products for any particular purpose, nor does ON Semiconductor assume any liability arising out of the application or use of any product or circuit, and specifically disclaims any and all liability, including without limitation special, consequential or incidental damages. ON Semiconductor does not convey any license under its patent rights nor the rights of others.

© Semiconductor Components Industries, LLC, 2019

SC−88/SC70−6/SOT−363
CASE 419B−02
ISSUE Y

DATE 11 DEC 2012

1
SCALE 2:1

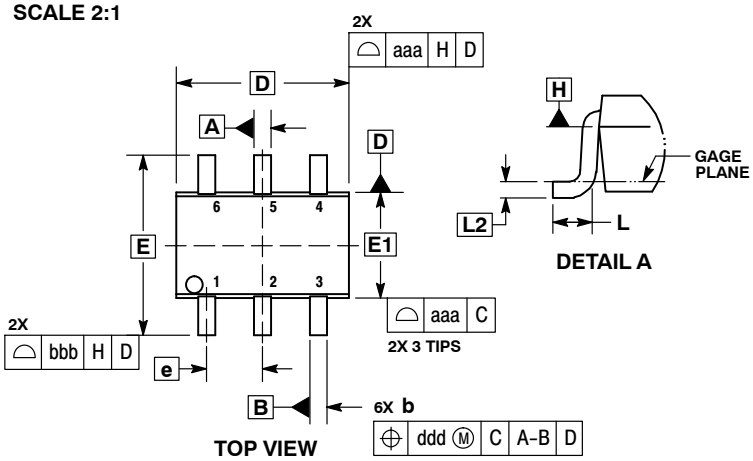

TOP VIEW

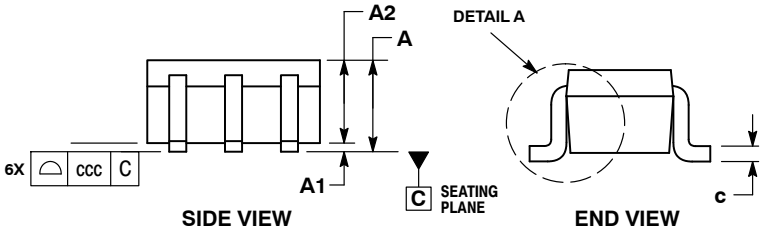

SIDE VIEW **END VIEW**

NOTES:
1. DIMENSIONING AND TOLERANCING PER ASME Y14.5M, 1994.
2. CONTROLLING DIMENSION: MILLIMETERS.
3. DIMENSIONS D AND E1 DO NOT INCLUDE MOLD FLASH, PROTRUSIONS, OR GATE BURRS. MOLD FLASH, PROTRUSIONS, OR GATE BURRS SHALL NOT EXCEED 0.20 PER END.
4. DIMENSIONS D AND E1 AT THE OUTERMOST EXTREMES OF THE PLASTIC BODY AND DATUM H.
5. DATUMS A AND B ARE DETERMINED AT DATUM H.
6. DIMENSIONS b AND c APPLY TO THE FLAT SECTION OF THE LEAD BETWEEN 0.08 AND 0.15 FROM THE TIP.
7. DIMENSION b DOES NOT INCLUDE DAMBAR PROTRUSION. ALLOWABLE DAMBAR PROTRUSION SHALL BE 0.08 TOTAL IN EXCESS OF DIMENSION b AT MAXIMUM MATERIAL CONDITION. THE DAMBAR CANNOT BE LOCATED ON THE LOWER RADIUS OF THE FOOT.

	MILLIMETERS			INCHES		
DIM	MIN	NOM	MAX	MIN	NOM	MAX
A	−−−	−−−	1.10	−−−	−−−	0.043
A1	0.00	−−−	0.10	0.000	−−−	0.004
A2	0.70	0.90	1.00	0.027	0.035	0.039
b	0.15	0.20	0.25	0.006	0.008	0.010
C	0.08	0.15	0.22	0.003	0.006	0.009
D	1.80	2.00	2.20	0.070	0.078	0.086
E	2.00	2.10	2.20	0.078	0.082	0.086
E1	1.15	1.25	1.35	0.045	0.049	0.053
e	0.65 BSC			0.026 BSC		
L	0.26	0.36	0.46	0.010	0.014	0.018
L2	0.15 BSC			0.006 BSC		
aaa	0.15			0.006		
bbb	0.30			0.012		
ccc	0.10			0.004		
ddd	0.10			0.004		

RECOMMENDED SOLDERING FOOTPRINT*

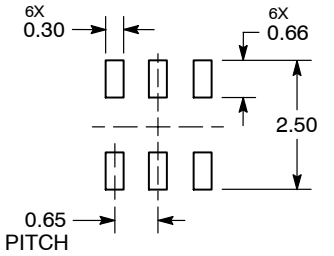

DIMENSIONS: MILLIMETERS

*For additional information on our Pb−Free strategy and soldering details, please download the ON Semiconductor Soldering and Mounting Techniques Reference Manual, SOLDERRM/D.

GENERIC MARKING DIAGRAM*

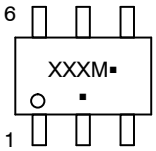

XXX = Specific Device Code
M = Date Code*
▪ = Pb−Free Package

(Note: Microdot may be in either location)

*Date Code orientation and/or position may vary depending upon manufacturing location.

*This information is generic. Please refer to device data sheet for actual part marking. Pb−Free indicator, "G" or microdot "▪", may or may not be present. Some products may not follow the Generic Marking.

STYLES ON PAGE 2

ON Semiconductor and ON are trademarks of Semiconductor Components Industries, LLC dba ON Semiconductor or its subsidiaries in the United States and/or other countries. ON Semiconductor reserves the right to make changes without further notice to any products herein. ON Semiconductor makes no warranty, representation or guarantee regarding the suitability of its products for any particular purpose, nor does ON Semiconductor assume any liability arising out of the application or use of any product or circuit, and specifically disclaims any and all liability, including without limitation special, consequential or incidental damages. ON Semiconductor does not convey any license under its patent rights nor the rights of others.

© Semiconductor Components Industries, LLC, 2019

STYLE 1:
PIN 1. EMITTER 2
2. BASE 2
3. COLLECTOR 1
4. EMITTER 1
5. BASE 1
6. COLLECTOR 2

STYLE 2:
CANCELLED

STYLE 3:
CANCELLED

STYLE 4:
PIN 1. CATHODE
2. CATHODE
3. COLLECTOR
4. EMITTER
5. BASE
6. ANODE

STYLE 5:
PIN 1. ANODE
2. ANODE
3. COLLECTOR
4. EMITTER
5. BASE
6. CATHODE

STYLE 6:
PIN 1. ANODE 2
2. N/C
3. CATHODE 1
4. ANODE 1
5. N/C
6. CATHODE 2

STYLE 7:
PIN 1. SOURCE 2
2. DRAIN 2
3. GATE 1
4. SOURCE 1
5. DRAIN 1
6. GATE 2

STYLE 8:
CANCELLED

STYLE 9:
PIN 1. EMITTER 2
2. EMITTER 1
3. COLLECTOR 1
4. BASE 1
5. BASE 2
6. COLLECTOR 2

STYLE 10:
PIN 1. SOURCE 2
2. SOURCE 1
3. GATE 1
4. DRAIN 1
5. DRAIN 2
6. GATE 2

STYLE 11:
PIN 1. CATHODE 2
2. CATHODE 2
3. ANODE 1
4. CATHODE 1
5. CATHODE 1
6. ANODE 2

STYLE 12:
PIN 1. ANODE 2
2. ANODE 2
3. CATHODE 1
4. ANODE 1
5. ANODE 1
6. CATHODE 2

STYLE 13:
PIN 1. ANODE
2. N/C
3. COLLECTOR
4. EMITTER
5. BASE
6. CATHODE

STYLE 14:
PIN 1. VREF
2. GND
3. GND
4. IOUT
5. VEN
6. VCC

STYLE 15:
PIN 1. ANODE 1
2. ANODE 2
3. ANODE 3
4. CATHODE 3
5. CATHODE 2
6. CATHODE 1

STYLE 16:
PIN 1. BASE 1
2. EMITTER 2
3. COLLECTOR 2
4. BASE 2
5. EMITTER 1
6. COLLECTOR 1

STYLE 17:
PIN 1. BASE 1
2. EMITTER 1
3. COLLECTOR 2
4. BASE 2
5. EMITTER 2
6. COLLECTOR 1

STYLE 18:
PIN 1. VIN1
2. VCC
3. VOUT2
4. VIN2
5. GND
6. VOUT1

STYLE 19:
PIN 1. I OUT
2. GND
3. GND
4. V CC
5. V EN
6. V REF

STYLE 20:
PIN 1. COLLECTOR
2. COLLECTOR
3. BASE
4. EMITTER
5. COLLECTOR
6. COLLECTOR

STYLE 21:
PIN 1. ANODE 1
2. N/C
3. ANODE 2
4. CATHODE 2
5. N/C
6. CATHODE 1

STYLE 22:
PIN 1. D1 (i)
2. GND
3. D2 (i)
4. D2 (c)
5. VBUS
6. D1 (c)

STYLE 23:
PIN 1. Vn
2. CH1
3. Vp
4. N/C
5. CH2
6. N/C

STYLE 24:
PIN 1. CATHODE
2. ANODE
3. CATHODE
4. CATHODE
5. CATHODE
6. CATHODE

STYLE 25:
PIN 1. BASE 1
2. CATHODE
3. COLLECTOR 2
4. BASE 2
5. EMITTER
6. COLLECTOR 1

STYLE 26:
PIN 1. SOURCE 1
2. GATE 1
3. DRAIN 2
4. SOURCE 2
5. GATE 2
6. DRAIN 1

STYLE 27:
PIN 1. BASE 2
2. BASE 1
3. COLLECTOR 1
4. EMITTER 1
5. EMITTER 2
6. COLLECTOR 2

STYLE 28:
PIN 1. DRAIN
2. DRAIN
3. GATE
4. SOURCE
5. DRAIN
6. DRAIN

STYLE 29:
PIN 1. ANODE
2. ANODE
3. COLLECTOR
4. EMITTER
5. BASE/ANODE
6. CATHODE

STYLE 30:
PIN 1. SOURCE 1
2. DRAIN 2
3. DRAIN 2
4. SOURCE 2
5. GATE 1
6. DRAIN 1

Note: Please refer to datasheet for style callout. If style type is not called out in the datasheet refer to the device datasheet pinout or pin assignment.

ON Semiconductor and ON are trademarks of Semiconductor Components Industries, LLC dba ON Semiconductor or its subsidiaries in the United States and/or other countries. ON Semiconductor reserves the right to make changes without further notice to any products herein. ON Semiconductor makes no warranty, representation or guarantee regarding the suitability of its products for any particular purpose, nor does ON Semiconductor assume any liability arising out of the application or use of any product or circuit, and specifically disclaims any and all liability, including without limitation special, consequential or incidental damages. ON Semiconductor does not convey any license under its patent rights nor the rights of others.

© Semiconductor Components Industries, LLC, 2019

UDFN6 1.0X1.0, 0.35P
CASE 517DP
ISSUE O

DATE 31 AUG 2016

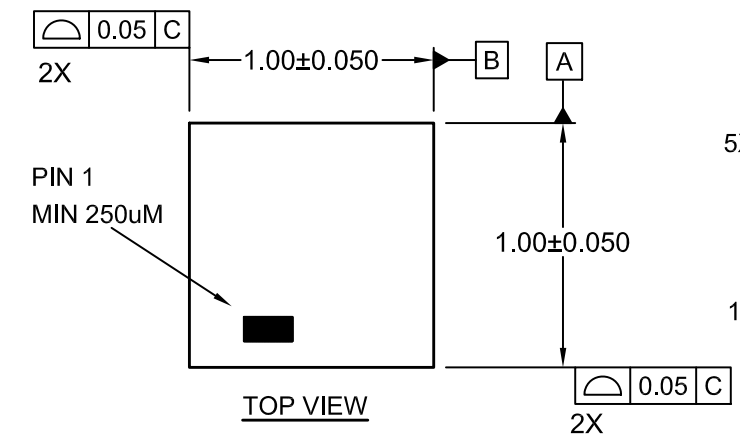

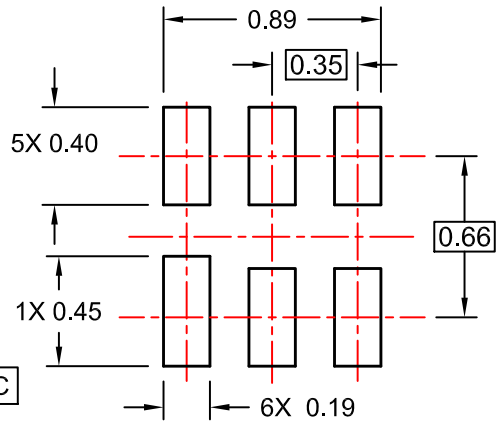

RECOMMENDED LAND PATTERN
FOR SPACE CONSTRAINED PCB

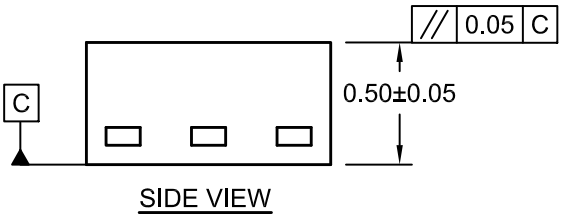

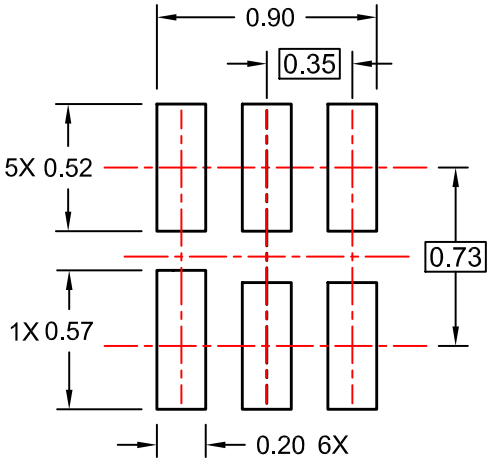

ALTERNATIVE LAND PATTERN
FOR UNIVERSAL APPLICATION

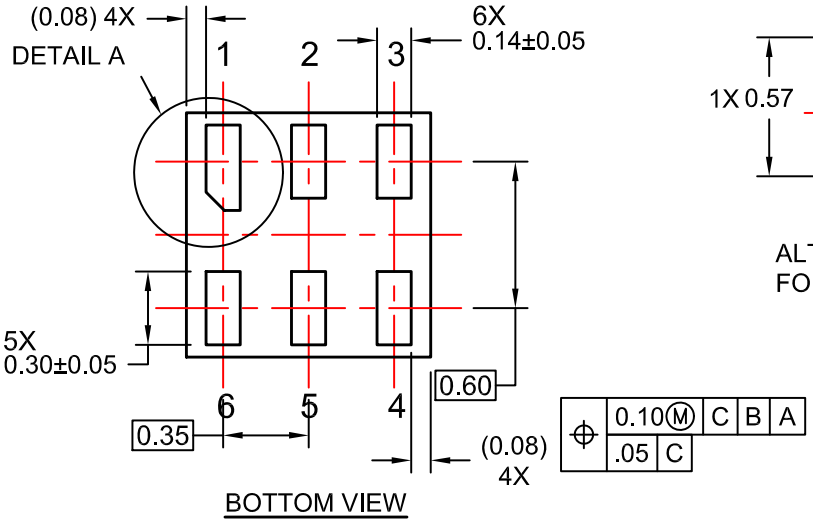

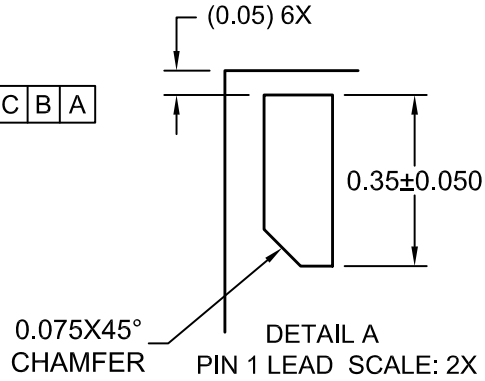

NOTES:

A. COMPLIES TO JEDEC MO-252 STANDARD
B. DIMENSIONS ARE IN MILLIMETERS.
C. DIMENSIONS AND TOLERANCES PER ASME Y14.5M, 2009

DOCUMENT NUMBER:	**98AON13593G**	Electronic versions are uncontrolled except when accessed directly from the Document Repository. Printed versions are uncontrolled except when stamped "CONTROLLED COPY" in red.
DESCRIPTION:	**UDFN6 1.0X1.0, 0.35P**	**PAGE 1 OF 1**

ON Semiconductor and ON are trademarks of Semiconductor Components Industries, LLC dba ON Semiconductor or its subsidiaries in the United States and/or other countries. ON Semiconductor reserves the right to make changes without further notice to any products herein. ON Semiconductor makes no warranty, representation or guarantee regarding the suitability of its products for any particular purpose, nor does ON Semiconductor assume any liability arising out of the application or use of any product or circuit, and specifically disclaims any and all liability, including without limitation special, consequential or incidental damages. ON Semiconductor does not convey any license under its patent rights nor the rights of others.

© Semiconductor Components Industries, LLC, 2019

onsemi, onsemi, and other names, marks, and brands are registered and/or common law trademarks of Semiconductor Components Industries, LLC dba "**onsemi**" or its affiliates and/or subsidiaries in the United States and/or other countries. **onsemi** owns the rights to a number of patents, trademarks, copyrights, trade secrets, and other intellectual property. A listing of **onsemi**'s product/patent coverage may be accessed at www.onsemi.com/site/pdf/Patent−Marking.pdf. **onsemi** reserves the right to make changes at any time to any products or information herein, without notice. The information herein is provided "as−is" and **onsemi** makes no warranty, representation or guarantee regarding the accuracy of the information, product features, availability, functionality, or suitability of its products for any particular purpose, nor does **onsemi** assume any liability arising out of the application or use of any product or circuit, and specifically disclaims any and all liability, including without limitation special, consequential or incidental damages. Buyer is responsible for its products and applications using **onsemi** products, including compliance with all laws, regulations and safety requirements or standards, regardless of any support or applications information provided by **onsemi**. "Typical" parameters which may be provided in **onsemi** data sheets and/or specifications can and do vary in different applications and actual performance may vary over time. All operating parameters, including "Typicals" must be validated for each customer application by customer's technical experts. **onsemi** does not convey any license under any of its intellectual property rights nor the rights of others. **onsemi** products are not designed, intended, or authorized for use as a critical component in life support systems or any FDA Class 3 medical devices or medical devices with a same or similar classification in a foreign jurisdiction or any devices intended for implantation in the human body. Should Buyer purchase or use **onsemi** products for any such unintended or unauthorized application, Buyer shall indemnify and hold **onsemi** and its officers, employees, subsidiaries, affiliates, and distributors harmless against all claims, costs, damages, and expenses, and reasonable attorney fees arising out of, directly or indirectly, any claim of personal injury or death associated with such unintended or unauthorized use, even if such claim alleges that **onsemi** was negligent regarding the design or manufacture of the part. **onsemi** is an Equal Opportunity/Affirmative Action Employer. This literature is subject to all applicable copyright laws and is not for resale in any manner.

PUBLICATION ORDERING INFORMATION

LITERATURE FULFILLMENT:
Email Requests to: orderlit@onsemi.com

onsemi Website: www.onsemi.com

TECHNICAL SUPPORT
North American Technical Support:
Voice Mail: 1 800−282−9855 Toll Free USA/Canada
Phone: 011 421 33 790 2910

Europe, Middle East and Africa Technical Support:
Phone: 00421 33 790 2910
For additional information, please contact your local Sales Representative

◊