Charge Protection IC Series with Built-in FET

Negative Voltage Protection type

BD6046GUL

No.09031EAT02

●Descriptions

BD6046GUL protects the devices from the abnormal input voltage at the USB port.
Addition to the conventinal charge protection IC, it prevents the negative voltage happened by the USB reverse insertion without any additional compornents.
ROHM's original charge protection IC series enables to protect the abnormal input voltage from -30V to +30V.

●Features

1) Overvoltage Protection up to 28V
2) Negative Voltage Protection
3) Internal Low Ron (250mΩ) FET
4) Over voltage Lockout (OVLO)
5) Under voltage Lockout(UVLO)
6) Internal 2.5msec Startup Delay
7) Over Current Protect
8) Thermal Shut Down
9) Small package: VCSP50L2(2.5mm x 2.5mm, height=0.55mm)

●Applications

Mobile phones, MP3 players, Digital Still Camera, PDA, IC recorder, Electronic Dictionary, Handheld Game, Game Controller, Camcorder, Bluetooth Headsets, etc

●Absolute maximum ratings (Ta=25℃)

Parameter	Symbol	Rating	Unit	Conditions
Input supply voltage 1	Vmax1	-30～30	V	IN
Input supply voltage 2	Vmax2	-0.3～7	V	other
Power dissipation	Pd	975	mW	
Operating temperature range	Topr	-40～+85	℃	
Storage temperature range	Tstr	-55～+150	℃	

※ When using more than at Ta=25℃, it is reduced 7.8mW per 1℃.(ROHM specification board 50mm× 58mm mounting.)

●Recommended operating range (Ta=-40～+85℃)

Parameter	Symbol	Range	Unit	Usage
Input voltage range	V_{in}	2.2～28	V	

※ This product is not especially designed to be protected from radioactivity.

© 2009 ROHM Co., Ltd. All rights reserved.

●Electrical Characteristics

(Unless otherwise noted, Ta = 25°C, IN=5V)

Parameter	Symbol	Rating			Unit	Conditions
		Min.	Typ.	Max.		
○Electrical						
Input Voltage Range	VIN	-	-	28	V	
Supply Quiescent Current	ICC		35	70	μA	
Under Voltage Lockout	UVLO	3.42	3.6	3.78	V	IN=decreasing
Under Voltage Lockout Hysteresis	UVLOh	50	100	150	mV	IN=increasing
Over Voltage Lockout	OVLO	6.5	6.7	6.9	V	IN=increasing
Over Voltage Lockout Hysteresis	OVLOh	50	100	150	mV	IN=decreasing
Current limit	ILM	1.2	-	-	A	
Vin vs. Vout Res.	RON	-	250	300	mΩ	
FLGB Output Low Voltage	FLGBVO	-	-	400	mV	SINK=1mA
FLGB Leakage Current	FLGBleak	-	-	1	μA	
○Timings (Flgb pull up resistance 100kΩ)						
Start Up Delay	Ton	-	2.5	5	msec	
Output Turn Off Time	Toff	-	2	10	μsec	
Alert Delay	Tovp	-	1.5	10	μsec	

* This product is not especially designed to be protected from radioactivity.

●Block Diagram

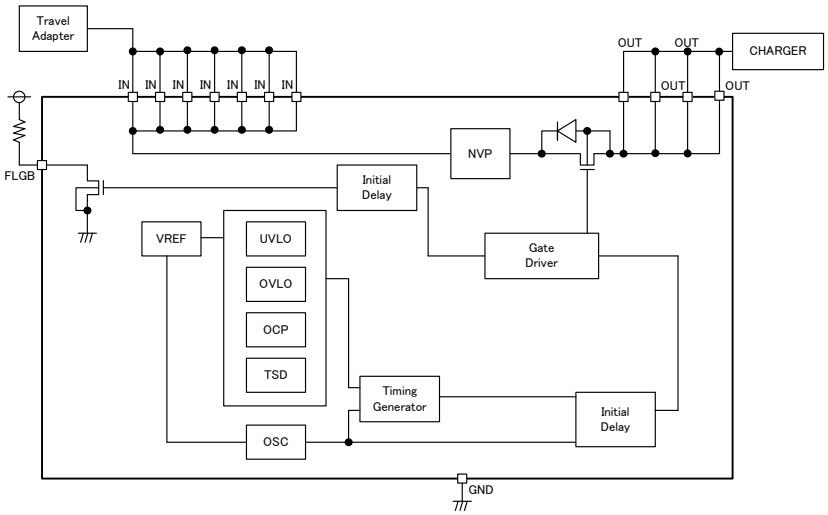

Fig. 1 Block Diagram

●PIN number / PIN name

Pin number	Pin name
A3, A4,B3, B4,C4, D3,D4	IN
A1, B1,C1, D1	OUT
D2	GND
A2	FLGB

© 2009 ROHM Co., Ltd. All rights reserved.

● **Package Dimensions**

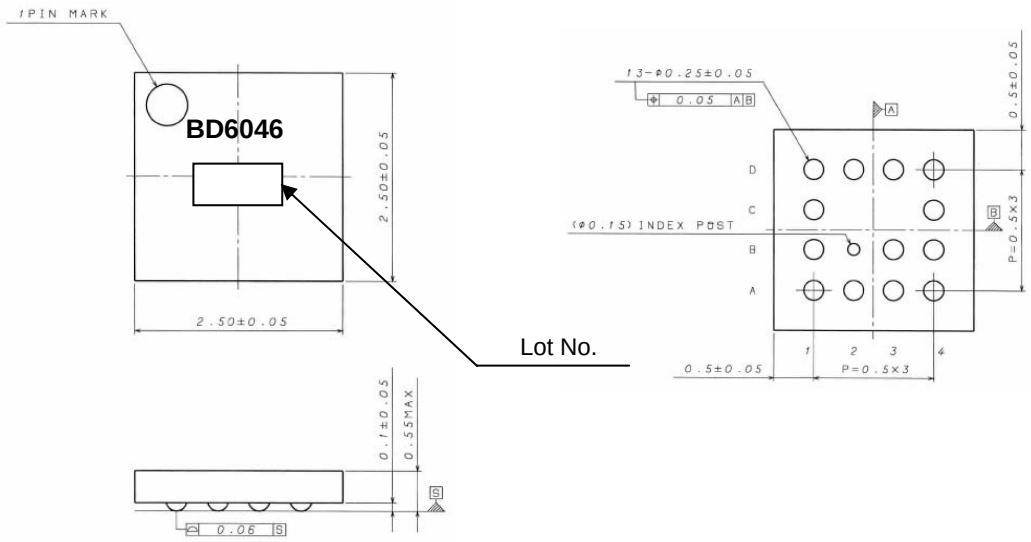

Fig. 2 Package Dimensions (VCSP50L2)

●**Ball Configuration**

Top View

	1	2	3	4
A	OUT	FLGB	IN	IN
B	OUT	index	IN	IN
C	OUT			IN
D	OUT	GND	IN	IN

Bottom View

	1	2	3	4
D	OUT	GND	IN	IN
C	OUT			IN
B	OUT	index	IN	IN
A	OUT	FLGB	IN	IN

Fig. 3 Ball Configuration

●**PIN DESCRIPTIONS**

PIN	NAME	FUNCTION
A3, A4, B3, B4, C4, D3, D4	IN	Input voltage Pin. A 1・F low ESR capacitor, or larger must be connected between this pin and GND
A1, B1, C1, D1	OUT	Output Voltage Pin
A2	FLGB	Open-drain output pin that turns low when any protection event occurs. (overvoltage protection, thermal shut down)
D2	GND	Ground Pin

© 2009 ROHM Co., Ltd. All rights reserved.

●Typical Application Circuit

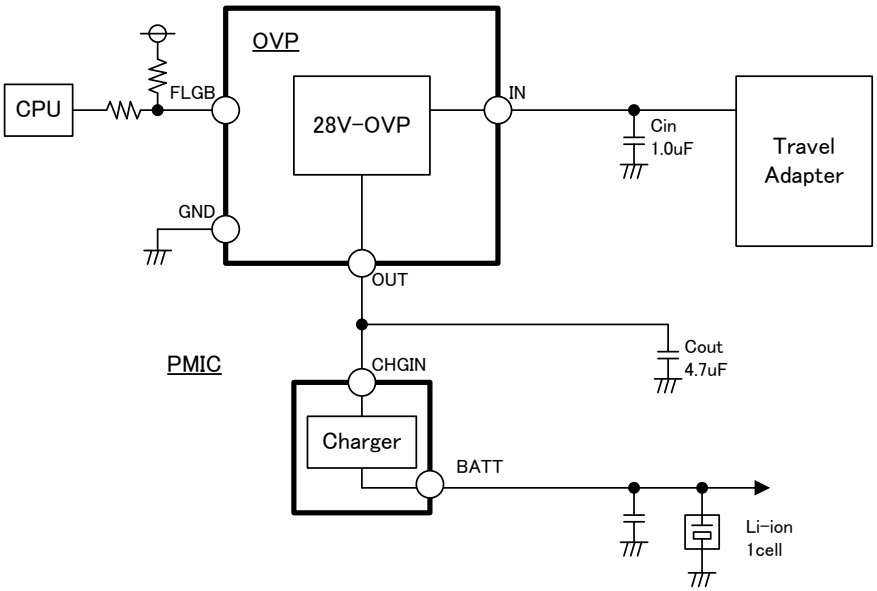

Fig. 4 Application Circuit

・Safety is high because it detects, and it protects it for an abnormal voltage up to 28V.
・It contributes to the miniaturization because all external is built into.

© 2009 ROHM Co., Ltd. All rights reserved.

●**Timing Diagram**

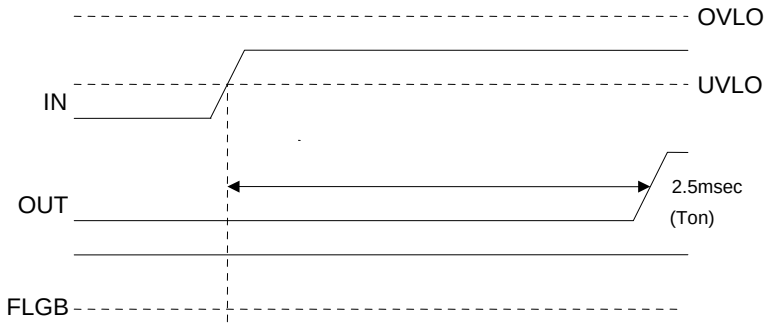

Fig. 5 Start up sequence

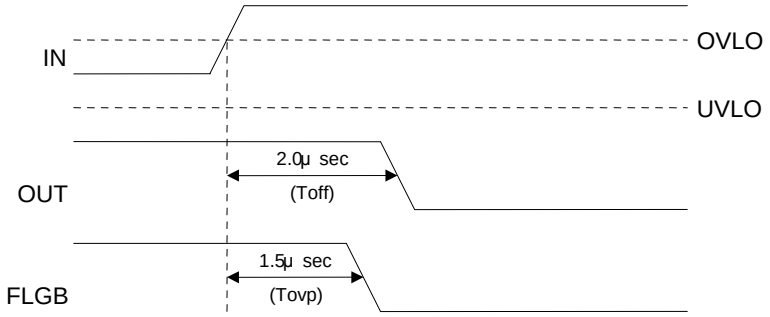

Fig. 6 Shutdown by over voltage detection

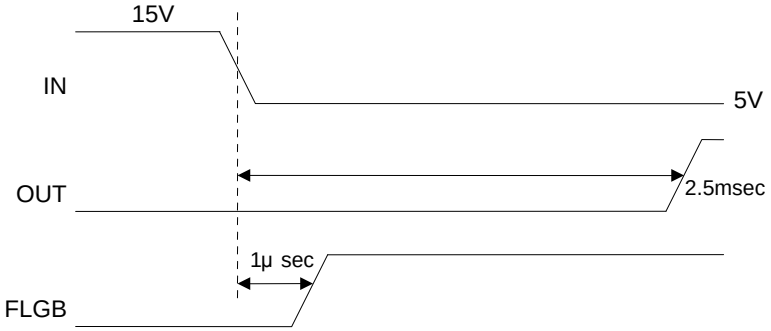

Fig. 7 Recovery from overvoltage protection

© 2009 ROHM Co., Ltd. All rights reserved.

●Notes foer use

(1) Absolute maximum ratings
If applied voltage (VDD, VIN), operating temperature range (Topr), or other absolute maximum ratings are exceeded, there is a risk of damage. Since it is not possible to identify short, open, or other damage modes, if special modes in which absolute maximum ratings are exceeded are assumed, consider applying fuses or other physical safety measures.

(2) Recommended operating range
This is the range within which it is possible to obtain roughly the expected characteristics. For electrical characteristics, it is those that are guaranteed under the conditions for each parameter. Even when these are within the recommended operating range, voltage and temperature characteristics are indicated.

(3) Reverse connection of power supply connector
There is a risk of damaging the LSI by reverse connection of the power supply connector. For protection from reverse connection, take measures such as externally placing a diode between the power supply and the power supply pin of the LSI.

(4) Power supply lines
In the design of the board pattern, make power supply and GND line wiring low impedance.
When doing so, although the digital power supply and analog power supply are the same potential, separate the digital power supply pattern and analog power supply pattern to deter digital noise from entering the analog power supply due to the common impedance of the wiring patterns. Similarly take pattern design into account for GND lines as well.
Furthermore, for all power supply pins of the LSI, in conjunction with inserting capacitors between power supply and GND pins, when using electrolytic capacitors, determine constants upon adequately confirming that capacitance loss occurring at low temperatures is not a problem for various characteristics of the capacitors used.

(5) GND voltage
Make the potential of a GND pin such that it will be the lowest potential even if operating below that. In addition, confirm that there are no pins for which the potential becomes less than a GND by actually including transition phenomena.

(6) Shorts between pins and misinstallation
When installing in the set board, pay adequate attention to orientation and placement discrepancies of the LSI. If it is installed erroneously, there is a risk of LSI damage. There also is a risk of damage if it is shorted by a foreign substance getting between pins or between a pin and a power supply or GND.

(7) Operation in strong magnetic fields
Be careful when using the LSI in a strong magnetic field, since it may malfunction.

(8) nspection in set board
When inspecting the LSI in the set board, since there is a risk of stress to the LSI when capacitors are connected to low impedance LSI pins, be sure to discharge for each process. Moreover, when getting it on and off of a jig in the inspection process, always connect it after turning off the power supply, perform the inspection, and remove it after turning off the power supply. Furthermore, as countermeasures against static electricity, use grounding in the assembly process and take appropriate care in transport and storage.

(9) Input pins
Parasitic elements inevitably are formed on an LSI structure due to potential relationships. Because parasitic elements operate, they give rise to interference with circuit operation and may be the cause of malfunctions as well as damage. Accordingly, take care not to apply a lower voltage than GND to an input pin or use the LSI in other ways such that parasitic elements operate. Moreover, do not apply a voltage to an input pin when the power supply voltage is not being applied to the LSI. Furthermore, when the power supply voltage is being applied, make each input pin a voltage less than the power supply voltage as well as within the guaranteed values of electrical characteristics.

(10) Ground wiring pattern
When there is a small signal GND and a large current GND, it is recommended that you separate the large current GND pattern and small signal GND pattern and provide single point grounding at the reference point of the set so that voltage variation due to resistance components of the pattern wiring and large currents do not cause the small signal GND voltage to change. Take care that the GND wiring pattern of externally attached components also does not change.

(11) Externally attached capacitors
When using ceramic capacitors for externally attached capacitors, determine constants upon taking into account a lowering of the rated capacitance due to DC bias and capacitance change due to factors such as temperature.

(12) Thermal shutdown circuit (TSD)
When the junction temperature reaches the defined value, the thermal shutdown circuit operates and turns a switch OFF. The thermal shutdown circuit, which is aimed at isolating the LSI from thermal runaway as much as possible, is not aimed at the protection or guarantee of the LSI. Therefore, do not continuously use the LSI with this circuit operating or use the LSI assuming its operation.

(13) Thermal design
Perform thermal design in which there are adequate margins by taking into account the permissible dissipation (Pd) in actual states of use.

© 2009 ROHM Co., Ltd. All rights reserved.

●Ordering part number

B	D	6	0	4	6	G	U	L	-	E	2

- Part No.
- Part No. BD6046
- Package GUL : VCSP50L2
- Packaging and forming specification E2: Embossed tape and reel

VCSP50L2(BD6046GUL)

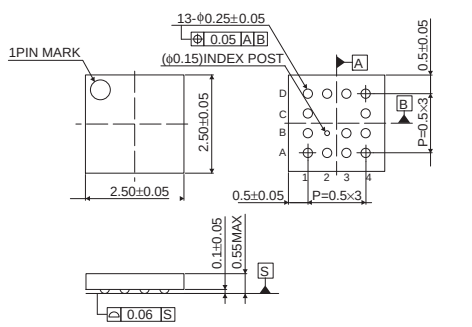

<Tape and Reel information>

Tape	Embossed carrier tape
Quantity	3000pcs
Direction of feed	E2 (The direction is the 1pin of product is at the upper left when you hold reel on the left hand and you pull out the tape on the right hand)

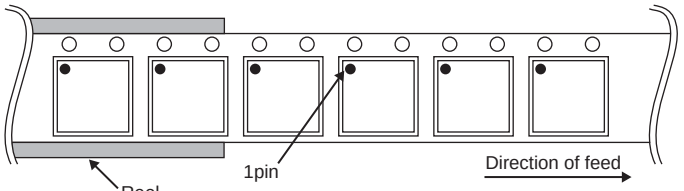

∗Order quantity needs to be multiple of the minimum quantity.

© 2009 ROHM Co., Ltd. All rights reserved.

Notice

Precaution on using ROHM Products

1. Our Products are designed and manufactured for application in ordinary electronic equipments (such as AV equipment, OA equipment, telecommunication equipment, home electronic appliances, amusement equipment, etc.). If you intend to use our Products in devices requiring extremely high reliability (such as medical equipment (Note 1), transport equipment, traffic equipment, aircraft/spacecraft, nuclear power controllers, fuel controllers, car equipment including car accessories, safety devices, etc.) and whose malfunction or failure may cause loss of human life, bodily injury or serious damage to property ("Specific Applications"), please consult with the ROHM sales representative in advance. Unless otherwise agreed in writing by ROHM in advance, ROHM shall not be in any way responsible or liable for any damages, expenses or losses incurred by you or third parties arising from the use of any ROHM's Products for Specific Applications.

(Note1) Medical Equipment Classification of the Specific Applications

JAPAN	USA	EU	CHINA
CLASSⅢ	CLASSⅢ	CLASSⅡb	CLASSⅢ
CLASSⅣ		CLASSⅢ	

2. ROHM designs and manufactures its Products subject to strict quality control system. However, semiconductor products can fail or malfunction at a certain rate. Please be sure to implement, at your own responsibilities, adequate safety measures including but not limited to fail-safe design against the physical injury, damage to any property, which a failure or malfunction of our Products may cause. The following are examples of safety measures:
   [a] Installation of protection circuits or other protective devices to improve system safety
   [b] Installation of redundant circuits to reduce the impact of single or multiple circuit failure

3. Our Products are designed and manufactured for use under standard conditions and not under any special or extraordinary environments or conditions, as exemplified below. Accordingly, ROHM shall not be in any way responsible or liable for any damages, expenses or losses arising from the use of any ROHM's Products under any special or extraordinary environments or conditions. If you intend to use our Products under any special or extraordinary environments or conditions (as exemplified below), your independent verification and confirmation of product performance, reliability, etc, prior to use, must be necessary:
   [a] Use of our Products in any types of liquid, including water, oils, chemicals, and organic solvents
   [b] Use of our Products outdoors or in places where the Products are exposed to direct sunlight or dust
   [c] Use of our Products in places where the Products are exposed to sea wind or corrosive gases, including Cl_2, H_2S, NH_3, SO_2, and NO_2
   [d] Use of our Products in places where the Products are exposed to static electricity or electromagnetic waves
   [e] Use of our Products in proximity to heat-producing components, plastic cords, or other flammable items
   [f] Sealing or coating our Products with resin or other coating materials
   [g] Use of our Products without cleaning residue of flux (even if you use no-clean type fluxes, cleaning residue of flux is recommended); or Washing our Products by using water or water-soluble cleaning agents for cleaning residue after soldering
   [h] Use of the Products in places subject to dew condensation

4. The Products are not subject to radiation-proof design.

5. Please verify and confirm characteristics of the final or mounted products in using the Products.

6. In particular, if a transient load (a large amount of load applied in a short period of time, such as pulse. is applied, confirmation of performance characteristics after on-board mounting is strongly recommended. Avoid applying power exceeding normal rated power; exceeding the power rating under steady-state loading condition may negatively affect product performance and reliability.

7. De-rate Power Dissipation (Pd) depending on Ambient temperature (Ta). When used in sealed area, confirm the actual ambient temperature.

8. Confirm that operation temperature is within the specified range described in the product specification.

9. ROHM shall not be in any way responsible or liable for failure induced under deviant condition from what is defined in this document.

Precaution for Mounting / Circuit board design

1. When a highly active halogenous (chlorine, bromine, etc.) flux is used, the residue of flux may negatively affect product performance and reliability.

2. In principle, the reflow soldering method must be used; if flow soldering method is preferred, please consult with the ROHM representative in advance.

For details, please refer to ROHM Mounting specification

© 2014 ROHM Co., Ltd. All rights reserved.

Precautions Regarding Application Examples and External Circuits

1. If change is made to the constant of an external circuit, please allow a sufficient margin considering variations of the characteristics of the Products and external components, including transient characteristics, as well as static characteristics.

2. You agree that application notes, reference designs, and associated data and information contained in this document are presented only as guidance for Products use. Therefore, in case you use such information, you are solely responsible for it and you must exercise your own independent verification and judgment in the use of such information contained in this document. ROHM shall not be in any way responsible or liable for any damages, expenses or losses incurred by you or third parties arising from the use of such information.

Precaution for Electrostatic

This Product is electrostatic sensitive product, which may be damaged due to electrostatic discharge. Please take proper caution in your manufacturing process and storage so that voltage exceeding the Products maximum rating will not be applied to Products. Please take special care under dry condition (e.g. Grounding of human body / equipment / solder iron, isolation from charged objects, setting of Ionizer, friction prevention and temperature / humidity control).

Precaution for Storage / Transportation

1. Product performance and soldered connections may deteriorate if the Products are stored in the places where:
   [a] the Products are exposed to sea winds or corrosive gases, including Cl2, H2S, NH3, SO2, and NO2
   [b] the temperature or humidity exceeds those recommended by ROHM
   [c] the Products are exposed to direct sunshine or condensation
   [d] the Products are exposed to high Electrostatic

2. Even under ROHM recommended storage condition, solderability of products out of recommended storage time period may be degraded. It is strongly recommended to confirm solderability before using Products of which storage time is exceeding the recommended storage time period.

3. Store / transport cartons in the correct direction, which is indicated on a carton with a symbol. Otherwise bent leads may occur due to excessive stress applied when dropping of a carton.

4. Use Products within the specified time after opening a humidity barrier bag. Baking is required before using Products of which storage time is exceeding the recommended storage time period.

Precaution for Product Label

QR code printed on ROHM Products label is for ROHM's internal use only.

Precaution for Disposition

When disposing Products please dispose them properly using an authorized industry waste company.

Precaution for Foreign Exchange and Foreign Trade act

Since our Products might fall under controlled goods prescribed by the applicable foreign exchange and foreign trade act, please consult with ROHM representative in case of export.

Precaution Regarding Intellectual Property Rights

1. All information and data including but not limited to application example contained in this document is for reference only. ROHM does not warrant that foregoing information or data will not infringe any intellectual property rights or any other rights of any third party regarding such information or data. ROHM shall not be in any way responsible or liable for infringement of any intellectual property rights or other damages arising from use of such information or data.:

2. No license, expressly or implied, is granted hereby under any intellectual property rights or other rights of ROHM or any third parties with respect to the information contained in this document.

Other Precaution

1. This document may not be reprinted or reproduced, in whole or in part, without prior written consent of ROHM.

2. The Products may not be disassembled, converted, modified, reproduced or otherwise changed without prior written consent of ROHM.

3. In no event shall you use in any way whatsoever the Products and the related technical information contained in the Products or this document for any military purposes, including but not limited to, the development of mass-destruction weapons.

4. The proper names of companies or products described in this document are trademarks or registered trademarks of ROHM, its affiliated companies or third parties.

© 2014 ROHM Co., Ltd. All rights reserved.

General Precaution

1. Before you use our Products, you are requested to carefully read this document and fully understand its contents. ROHM shall not be in any way responsible or liable for failure, malfunction or accident arising from the use of any ROHM's Products against warning, caution or note contained in this document.

2. All information contained in this document is current as of the issuing date and subject to change without any prior notice. Before purchasing or using ROHM's Products, please confirm the latest information with a ROHM sales representative.

3. The information contained in this document is provided on an "as is" basis and ROHM does not warrant that all information contained in this document is accurate and/or error-free. ROHM shall not be in any way responsible or liable for any damages, expenses or losses incurred by you or third parties resulting from inaccuracy or errors of or concerning such information.

© 2014 ROHM Co., Ltd. All rights reserved.