MAX803/MAX809/MAX810

3-Pin Microprocessor Reset Circuits

General Description

The MAX803/MAX809/MAX810 are microprocessor (µP) supervisory circuits used to monitor the power supplies in µP and digital systems. They provide excellent circuit reliability and low cost by eliminating external components and adjustments when used with +5V, +3.3V, +3.0V, or +2.5V powered circuits.

These circuits perform a single function: they assert a reset signal whenever the V_{CC} supply voltage declines below a preset threshold, keeping it asserted for at least 140ms after V_{CC} has risen above the reset threshold. Reset thresholds suitable for operation with a variety of supply voltages are available.

The MAX803 has an open-drain output stage, while the MAX809/MAX810 have push-pull outputs. The MAX803's open-drain $\overline{\text{RESET}}$ output requires a pullup resistor that can be connected to a voltage higher than V_{CC}. The MAX803/MAX809 have an active-low $\overline{\text{RESET}}$ output, while the MAX810 has an active-high RESET output. The reset comparator is designed to ignore fast transients on V_{CC}, and the outputs are guaranteed to be in the correct logic state for V_{CC} down to 1V.

Low supply current makes the MAX803/MAX809/MAX810 ideal for use in portable equipment. The MAX803 is available in a 3-pin SC70 package, and the MAX809/MAX810 are available in 3-pin SC70 or SOT23 packages.

Applications

Computers
Controllers
Intelligent Instruments
Critical µP and µC Power Monitoring
Portable/Battery-Powered Equipment
Automotive

Features

- **Precision Monitoring of +2.5V, +3V, +3.3V, and +5V Power-Supply Voltages**
- **Fully Specified Over Temperature**
- **Available in Three Output Configurations**
  - **Open-Drain $\overline{\text{RESET}}$ Output (MAX803)**
  - **Push-Pull $\overline{\text{RESET}}$ Output (MAX809)**
  - **Push-Pull RESET Output (MAX810)**
- **140ms min Power-On Reset Pulse Width**
- **12µA Supply Current**
- **Guaranteed Reset Valid to V_{CC} = +1V**
- **Power Supply Transient Immunity**
- **No External Components**
- **3-Pin SC70 and SOT23 Packages**

Ordering Information

PART	TEMP RANGE	PIN-PACKAGE
MAX803_EXR-T	-40°C to +125°C	3 SC70
MAX803_EXR+T	-40°C to +125°C	3 SC70
MAX803_EXR/V+	-40°C to +125°C	3 SC70
MAX809_EXR-T	-40°C to +125°C	3 SC70
MAX809_EXR+T	-40°C to +125°C	3 SC70
MAX809_EUR-T	-40°C to +105°C	3 SOT23
MAX809_EUR+T	-40°C to +105°C	3 SOT23
MAX810_EXR-T	-40°C to +125°C	3 SC70
MAX810_EXR+T	-40°C to +125°C	3 SC70
MAX810_EUR-T	-40°C to +105°C	3 SOT23
MAX810_EUR+T	-40°C to +105°C	3 SOT23

Note: *These parts are offered in 2.5k reels, and must be ordered in 2.5k increments. Insert the desired suffix letter from the Selector Guide into the blank to complete the part number. All versions of these products may not be available at the time of announcement. Contact factory for availability.*
Devices are available in both leaded and lead-free packaging.
+Denotes a lead(Pb)-free/RoHS-compliant package.
/V denotes an automotive qualified part.

Typical Operating Circuit

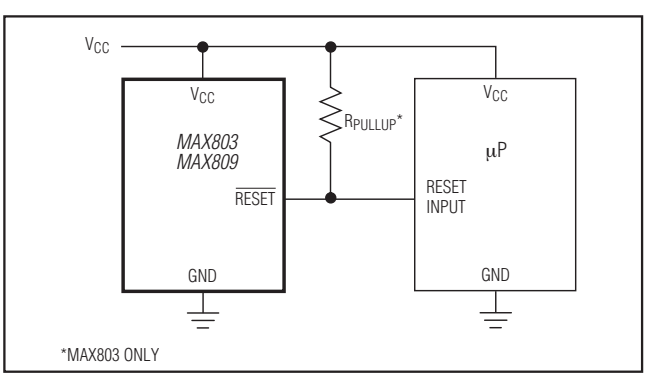

Pin Configuration

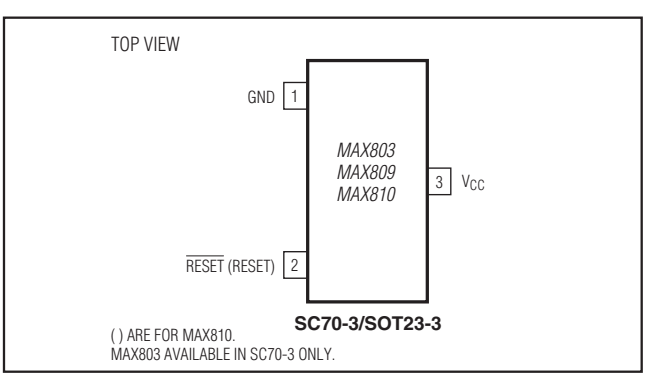

For pricing, delivery, and ordering information, please contact Maxim Direct at 1-888-629-4642, or visit Maxim's website at www.maximintegrated.com.

19-0344; Rev 8; 12/12

ABSOLUTE MAXIMUM RATINGS

Terminal Voltage (with respect to GND)
- V_{CC} ....-0.3V to +6.0V
- RESET, $\overline{RESET}$ (push-pull) ....-0.3V to (V_{CC} + 0.3V)
- $\overline{RESET}$ (open drain)....-0.3V to +6.0V

Input Current, V_{CC} 20mA
Output Current, RESET, $\overline{RESET}$ 20mA
Rate of Rise, V_{CC} 100V/µs

Continuous Power Dissipation (T_A = +70°C)
- 3-Pin SC70 (derate 2.17mW/°C above +70°C)....174mW
- 3-Pin SOT23 (derate 4mW/°C above +70°C)....320mW

Operating Temperature Range
- 3-Pin SC70....-40°C to +125°C
- 3-Pin SOT23....-40°C to +105°C

Storage Temperature Range ....-65°C to +150°C
Lead Temperature (soldering, 10s) ....+300°C
Soldering Temperature (reflow) ....+260°C

Stresses beyond those listed under "Absolute Maximum Ratings" may cause permanent damage to the device. These are stress ratings only, and functional operation of the device at these or any other conditions beyond those indicated in the operational sections of the specifications is not implied. Exposure to absolute maximum rating conditions for extended periods may affect device reliability.

ELECTRICAL CHARACTERISTICS

(V_{CC} = full range, T_A = -40°C to +105°C (SOT23) or T_A = -40°C to +125°C (SC70), unless otherwise noted. Typical values are at T_A = +25°C, V_{CC} = 5V for L/M/J versions, V_{CC} = 3.3V for T/S versions, V_{CC} = 3V for R version, and V_{CC} = 2.5V for Z version.) (Note 1)

PARAMETER	SYMBOL	CONDITIONS		MIN	TYP	MAX	UNITS
V_{CC} Range		T_A = 0°C to +70°C		1.0		5.5	V
		T_A = -40°C to +105°C (MAX8_ _ _EUR)		1.2		5.5	
		T_A = -40°C to +125°C (MAX8_ _ _EXR)		1.2		5.5	
Supply Current (SOT23)	I_{CC}	T_A = -40°C to +85°C	V_{CC} < 5.5V, MAX8_ _L/M		24	60	µA
			V_{CC} < 3.6V, MAX8_ _R/S/T/Z		17	50	
		T_A = +85°C to +105°C	V_{CC} < 5.5V, MAX8_ _L/M			100	
			V_{CC} < 3.6V, MAX8_ _R/S/T/Z			100	
Supply Current (SC70)	I_{CC}	T_A = -40°C to +85°C	V_{CC} < 5.5V, MAX8_ _L/M		24	35	
			V_{CC} < 3.6V, MAX8_ _R/S/T/Z		17	30	
		T_A = +85°C to +125°C	V_{CC} < 5.5V, MAX8_ _L/M			60	
			V_{CC} < 3.6V, MAX8_ _R/S/T/Z			60	
Reset Threshold (SOT only)	V_{TH}	MAX8_ _L	T_A = +25°C	4.56	4.63	4.70	V
			T_A = -40°C to +85°C	4.50		4.75	
			T_A = -40°C to +125°C	4.40		4.86	
		MAX8_ _M	T_A = +25°C	4.31	4.38	4.45	
			T_A = -40°C to +85°C	4.25		4.50	
			T_A = -40°C to +125°C	4.16		4.56	
		MAX809J (SOT only)	T_A = +25°C	3.93	4.00	4.06	
			T_A = -40°C to +85°C	3.89		4.10	
			T_A = -40°C to +125°C	3.80		4.20	
		MAX8_ _T	T_A = +25°C	3.04	3.08	3.11	
			T_A = -40°C to +85°C	3.00		3.15	
			T_A = -40°C to +125°C	2.92		3.23	
		MAX8_ _S	T_A = +25°C	2.89	2.93	2.96	
			T_A = -40°C to +85°C	2.85		3.00	
			T_A = -40°C to +125°C	2.78		3.08	
		MAX8_ _R	T_A = +25°C	2.59	2.63	2.66	
			T_A = -40°C to +85°C	2.55		2.70	
			T_A = -40°C to +125°C	2.50		2.76	

ELECTRICAL CHARACTERISTICS (continued)

(V_{CC} = full range, T_A = -40°C to +105°C (SOT23) or T_A = -40°C to +125°C (SC70), unless otherwise noted. Typical values are at T_A = +25°C, V_{CC} = 5V for L/M/J versions, V_{CC} = 3.3V for T/S versions, V_{CC} = 3V for R version, and V_{CC} = 2.5V for Z version.) (Note 1)

PARAMETER	SYMBOL	CONDITIONS		MIN	TYP	MAX	UNITS
Reset Threshold (SC70 only)	V_{TH}	MAX8_ _L	T_A = +25°C	4.56	4.63	4.70	V
			T_A = -40°C to +85°C	4.50		4.75	
			T_A = -40°C to +125°C	4.44		4.82	
		MAX8_ _M	T_A = +25°C	4.31	4.38	4.45	
			T_A = -40°C to +85°C	4.25		4.50	
			T_A = -40°C to +125°C	4.20		4.56	
		MAX8_ _T	T_A = +25°C	3.04	3.08	3.11	
			T_A = -40°C to +85°C	3.00		3.15	
			T_A = -40°C to +125°C	2.95		3.21	
		MAX8_ _S	T_A = +25°C	2.89	2.93	2.96	
			T_A = -40°C to +85°C	2.85		3.00	
			T_A = -40°C to +125°C	2.81		3.05	
		MAX8_ _R	T_A = +25°C	2.59	2.63	2.66	
			T_A = -40°C to +85°C	2.55		2.70	
			T_A = -40°C to +125°C	2.52		2.74	
		MAX8_ _Z (SC70 only)	T_A = +25°C	2.28	2.32	2.35	
			T_A = -40°C to +85°C	2.25		2.38	
			T_A = -40°C to +125°C	2.22		2.42	
Reset Threshold Tempco					30		ppm/°C
V_{CC} to Reset Delay (Note 2)		V_{CC} = V_{TH} to (V_{TH} - 100mV)			20		µs
Reset Active Timeout Period (SOT23)		T_A = -40°C to +85°C		140	240	560	ms
		T_A = +85°C to +105°C		100		840	
Reset Active Timeout Period (SC70)		T_A = -40°C to +85°C		140	240	460	ms
		T_A = +85°C to +125°C		100		840	
$\overline{\text{RESET}}$ Output Voltage Low (push-pull active low and open-drain active low, MAX803 and MAX809)	V_{OL}	V_{CC} = V_{TH} min, I_{SINK} = 1.2mA, MAX803R/S/T/Z, MAX809R/S/T/Z				0.3	V
		V_{CC} = V_{TH} min, I_{SINK} = 3.2mA, MAX803L/M, MAX809J/L/M				0.4	
		V_{CC} > 1.0V, I_{SINK} = 50µA				0.3	
$\overline{\text{RESET}}$ Output Voltage High (push-pull active low MAX809)	V_{OH}	V_{CC} > V_{TH} max, I_{SOURCE} = 500µA, MAX803R/S/T/Z, MAX809R/S/T/Z		0.8V_{CC}			V
		V_{CC} > V_{TH} max, I_{SOURCE} = 800µA, MAX803L/M, MAX809J/L/M		V_{CC} - 1.5			
RESET Output Voltage Low (push-pull active high, MAX810)	V_{OL}	V_{CC} = V_{TH} max, I_{SINK} = 1.2mA, MAX810R/S/T/Z				0.3	V
		V_{CC} = V_{TH} max, I_{SINK} = 3.2mA, MAX810L/M				0.4	

ELECTRICAL CHARACTERISTICS (continued)

(V_{CC} = full range, T_A = -40°C to +105°C (SOT23) or T_A = -40°C to +125°C (SC70), unless otherwise noted. Typical values are at T_A = +25°C, V_{CC} = 5V for L/M/J versions, V_{CC} = 3.3V for T/S versions, V_{CC} = 3V for R version, and V_{CC} = 2.5V for Z version.) (Note 1)

PARAMETER	SYMBOL	CONDITIONS	MIN	TYP	MAX	UNITS
RESET Output Voltage High (push-pull active high, MAX810)	V_{OH}	1.8V < V_{CC} < V_{TH} min, I_{SOURCE} = 150µA	0.8V_{CC}			V
RESET Open-Drain Output Leakage Current (MAX803) (Note 3)		V_{CC} > V_{TH}, RESET deasserted			1	µA

Note 1: Production testing done at T_A = +25°C; limits over temperature guaranteed by design only.
Note 2: $\overline{\text{RESET}}$ output for MAX803/MAX809; RESET output for MAX810.
Note 3: Guaranteed by design, not production tested.

Typical Operating Characteristics

(V_{CC} = full range, T_A = -40°C to +105°C, unless otherwise noted. Typical values are at T_A = +25°C, V_{CC} = +5V for L/M/J versions, V_{CC} = +3.3V for T/S versions, V_{CC} = +3V for R version, and V_{CC} = +2.5V for Z version.)

SUPPLY CURRENT vs. TEMPERATURE (SC70 PACKAGE, NO LOAD)

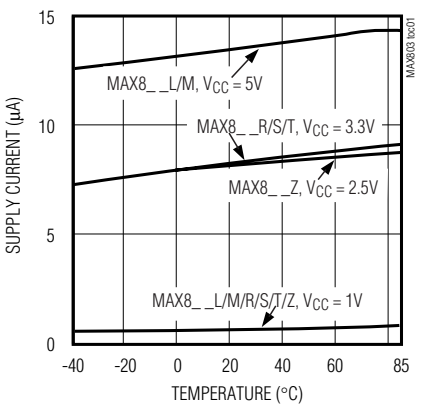

POWER-DOWN RESET DELAY vs. TEMPERATURE (MAX8_ _R/S/T/Z)

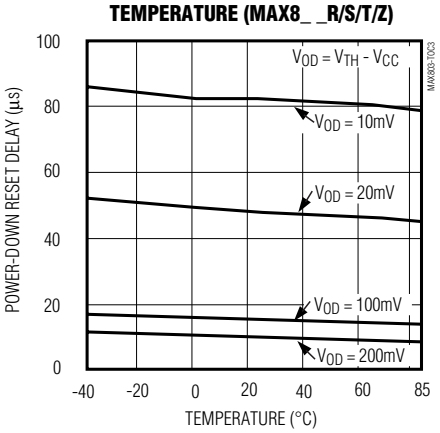

POWER-DOWN RESET DELAY vs. TEMPERATURE (MAX8_ _J/L/M)

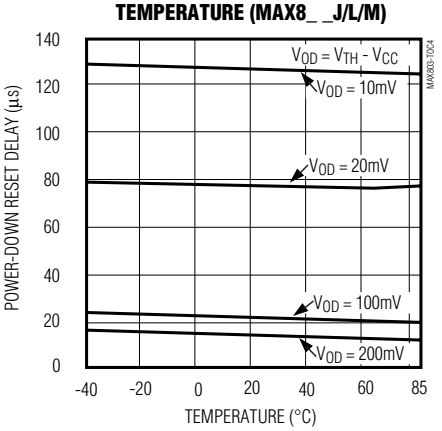

POWER-UP RESET TIMEOUT vs. TEMPERATURE

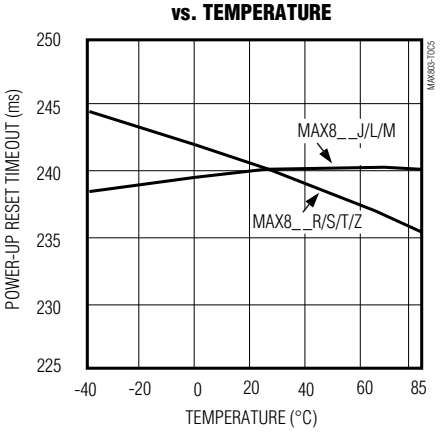

NORMALIZED RESET THRESHOLD vs. TEMPERATURE

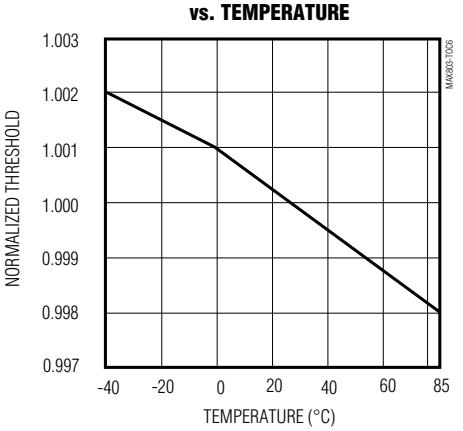

Selector Guide

PART/SUFFIX	RESET THRESHOLD (V)	OUTPUT TYPE	TOP MARK	
			SOT	SC70
MAX803L	4.63	OPEN-DRAIN $\overline{\text{RESET}}$	—	AAZ
MAX803M	4.38	OPEN-DRAIN $\overline{\text{RESET}}$	—	ABA
MAX803T	3.08	OPEN-DRAIN $\overline{\text{RESET}}$	—	ABB
MAX803S	2.93	OPEN-DRAIN $\overline{\text{RESET}}$	—	ABC
MAX803R	2.63	OPEN-DRAIN $\overline{\text{RESET}}$	—	ABD
MAX803Z	2.32	OPEN-DRAIN $\overline{\text{RESET}}$	—	ABE
MAX809L	4.63	PUSH-PULL $\overline{\text{RESET}}$	AAAA	AAN
MAX809M	4.38	PUSH-PULL $\overline{\text{RESET}}$	ABAA	AAO
MAX809J	4.00	PUSH-PULL $\overline{\text{RESET}}$	CWAA	—
MAX809T	3.08	PUSH-PULL $\overline{\text{RESET}}$	ACAA	AAP
MAX809S	2.93	PUSH-PULL $\overline{\text{RESET}}$	ADAA	AAQ
MAX809R	2.63	PUSH-PULL $\overline{\text{RESET}}$	AFAA	AAR
MAX809Z	2.32	PUSH-PULL $\overline{\text{RESET}}$	—	AAS
MAX810L	4.63	PUSH-PULL RESET	AGAA	AAT
MAX810M	4.38	PUSH-PULL RESET	AHAA	AAU
MAX810T	3.08	PUSH-PULL RESET	AJAA	AAV
MAX810S	2.93	PUSH-PULL RESET	AKAA	AAX
MAX810R	2.63	PUSH-PULL RESET	ALAA	AAW
MAX810Z	2.32	PUSH-PULL RESET	—	AAY

Detailed Description

A microprocessor's (µP's) reset input starts the µP in a known state. The MAX803/MAX809/MAX810 assert reset to prevent code-execution errors during power-up, power-down, or brownout conditions. They assert a reset signal whenever the V_{CC} supply voltage declines below a preset threshold, keeping it asserted for at least 140ms after V_{CC} has risen above the reset threshold. The MAX803 uses an open-drain output, and the MAX809/MAX810 have a push-pull output stage. Connect a pullup resistor on the MAX803's $\overline{\text{RESET}}$ output to any supply between 0 and 6V.

Pin Description

PIN	NAME	FUNCTION
1	GND	Ground
2	$\overline{\text{RESET}}$ (MAX803/ MAX809)	$\overline{\text{RESET}}$ Output remains low while V_{CC} is below the reset threshold, and for at least 140ms after V_{CC} rises above the reset threshold.
	RESET (MAX810)	RESET Output remains high while V_{CC} is below the reset threshold, and for at least 140ms after V_{CC} rises above the reset threshold.
3	V_{CC}	Supply Voltage (+5V, +3.3V, +3.0V, or +2.5V)

Applications Information

Negative-Going V_{CC} Transients

In addition to issuing a reset to the µP during power-up, power-down, and brownout conditions, the MAX803/MAX809/MAX810 are relatively immune to short-duration negative-going V_{CC} transients (glitches).

Figure 1 shows typical transient duration vs. reset comparator overdrive, for which the MAX803/MAX809/MAX810 do **not** generate a reset pulse. The graph was generated using a negative-going pulse applied to V_{CC}, starting 0.5V above the actual reset threshold and ending below it by the magnitude indicated (reset comparator overdrive). The graph indicates the maximum pulse width a negative-going V_{CC} transient can have without causing a reset pulse. As the magnitude of the transient increases (goes farther below the reset threshold), the maximum allowable pulse width decreases. Typically, for the MAX8__L and MAX8__M, a V_{CC} transient that goes 100mV below the reset threshold and lasts 20µs or less will not cause a reset pulse. A 0.1µF bypass capacitor mounted as close as possible to the V_{CC} pin provides additional transient immunity.

Ensuring a Valid Reset Output Down to V_{CC} = 0V

When V_{CC} falls below 1V, the MAX809 $\overline{\text{RESET}}$ output no longer sinks current—it becomes an open circuit.

Therefore, high-impedance CMOS logic inputs connected to $\overline{RESET}$ can drift to undetermined voltages. This presents no problem in most applications since most µP and other circuitry is inoperative with V_{CC} below 1V. However, in applications where $\overline{RESET}$ must be valid down to 0V, adding a pull-down resistor to $\overline{RESET}$ causes any stray leakage currents to flow to ground, holding $\overline{RESET}$ low (Figure 2). R1's value is not critical; 100kΩ is large enough not to load $\overline{RESET}$ and small enough to pull $\overline{RESET}$ to ground.

A 100kΩ pullup resistor to V_{CC} is also recommended for the MAX810 if RESET is required to remain valid for V_{CC} < 1V.

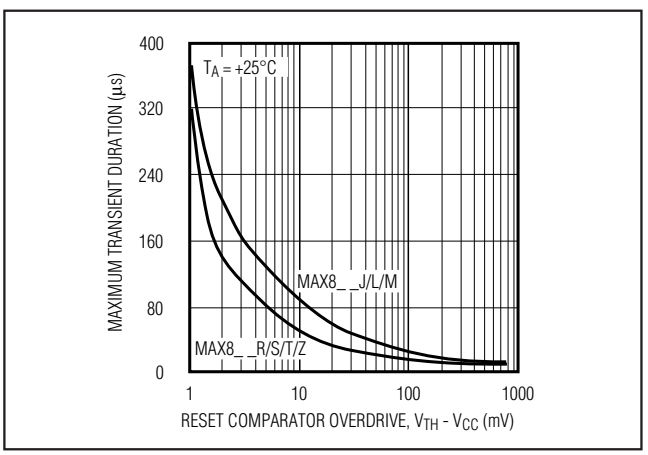

Figure 1. Maximum Transient Duration Without Causing a Reset Pulse vs. Reset Comparator Overdrive

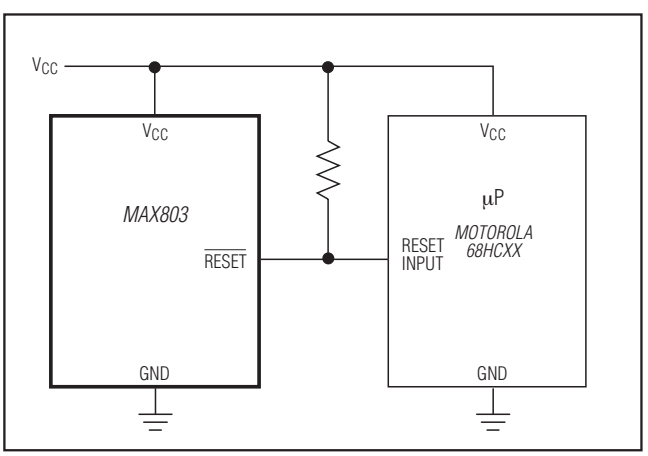

Figure 3. Interfacing to µPs with Bidirectional Reset I/O

Interfacing to µPs with Bidirectional Reset Pins

Since the $\overline{RESET}$ output on the MAX803 is open drain, this device interfaces easily with µPs that have bidirectional reset pins, such as the Motorola 68HC11. Connecting the µP supervisor's $\overline{RESET}$ output directly to the microcontroller's (µC's) $\overline{RESET}$ pin with a single pullup resistor allows either device to assert reset (Figure 3).

MAX803 Open-Drain $\overline{RESET}$ Output Allows Use with Multiple Supplies

Generally, the pullup connected to the MAX803 will connect to the supply voltage that is being monitored at the IC's V_{CC} pin. However, some systems may use the open-drain output to level-shift from the monitored supply to reset circuitry powered by some other supply (Figure 4). Note that as the MAX803's V_{CC} decreases

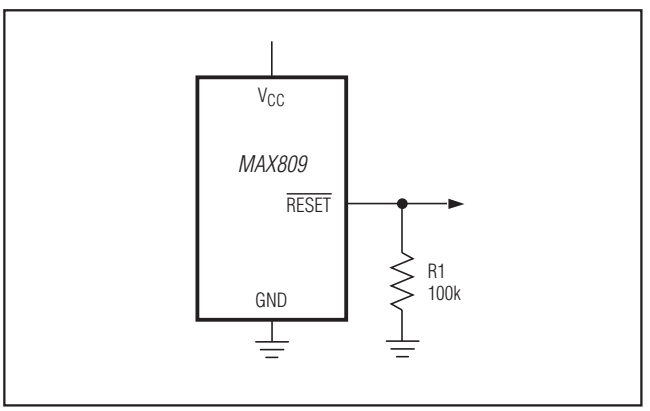

Figure 2. $\overline{RESET}$ Valid to V_{CC} = Ground Circuit

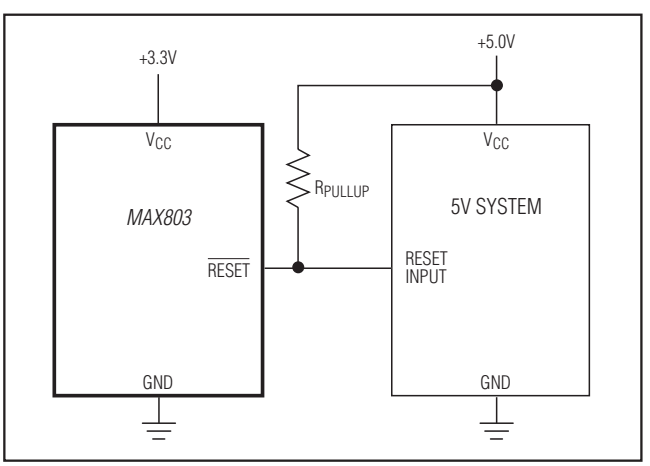

Figure 4. MAX803 Open-Drain $\overline{RESET}$ Output Allows Use with Multiple Supplies

below 1V, so does the IC's ability to sink current at RESET. Also, with any pullup, RESET will be pulled high as V_{CC} decays toward 0. The voltage where this occurs depends on the pullup resistor value and the voltage to which it is connected.

Benefits of Highly Accurate Reset Threshold

Most µP supervisor ICs have reset threshold voltages between 5% and 10% below the value of nominal supply voltages. This ensures a reset will **not** occur within 5% of the nominal supply, but **will** occur when the supply is 10% below nominal.

When using ICs rated at only the nominal supply ±5%, this leaves a zone of uncertainty where the supply is between 5% and 10% low, and where the reset may or may not be asserted.

The MAX8__L/T/Z use highly accurate circuitry to ensure that reset is asserted close to the 5% limit, and long before the supply has declined to 10% below nominal.

Chip Information

TRANSISTOR COUNT: 275 (SOT23)
380 (SC70)

Package Information

For the latest package outline information and land patterns (footprints), go to **www.maximintegrated.com/packages**. Note that a "+", "#", or "-" in the package code indicates RoHS status only. Package drawings may show a different suffix character, but the drawing pertains to the package regardless of RoHS status.

PACKAGE TYPE	PACKAGE CODE	DOCUMENT NO.
3 SC70	X3-2	21-0075
3 SOT23	U3-1	21-0051

Revision History

REVISION NUMBER	REVISION DATE	DESCRIPTION	PAGES CHANGED
0	12/94	Initial release.	—
7	2/10	Updated *Ordering information*, added lead-free note, and added soldering temperature in the *Absolute Maximum Ratings*.	1, 2
8	12/12	Added MAX803_EXR/V+ to *Ordering Information*	1

Maxim Integrated cannot assume responsibility for use of any circuitry other than circuitry entirely embodied in a Maxim Integrated product. No circuit patent licenses are implied. Maxim Integrated reserves the right to change the circuitry and specifications without notice at any time. The parametric values (min and max limits) shown in the Electrical Characteristics table are guaranteed. Other parametric values quoted in this data sheet are provided for guidance.

Maxim Integrated 160 Rio Robles, San Jose, CA 95134 USA 1-408-601-1000

© 2012 Maxim Integrated Products, Inc. Maxim Integrated and the Maxim Integrated logo are trademarks of Maxim Integrated Products, Inc.