TS12011/TS12012

A 0.8V/1.5µA Nanopower Op Amp, Comparator, and Reference

FEATURES

- NanoWatt Analog™ Op Amp, Comparator, and 0.58V Reference in Single 4 mm^2 Package
- Ultra Low Total Supply Current: 1.6µA (max)
- Supply Voltage Range: 0.8V to 2.5V
- Internal 0.58V Reference
- Op Amp and Comparator Input Ranges are Rail-to-Rail
- Unity-gain Stable Op Amp with A_{VOL} = 104dB
- Op Amp Output: Rail-to-Rail and Phase-Reversal-Free
- Internal ±7.5mV Comparator Hysteresis
- 20µs Comparator Propagation Delay
- Resettable Latched Comparator
- TS12011: Push-pull Rail-to-Rail Output
  TS12012: Open-drain Output

APPLICATIONS

Battery-powered Systems
Single-Cell and +1.8V, +2.5V Powered Systems
Low-Frequency, Local-Area Alarms/Detectors
Smoke Detectors and Safety Sensors
Infrared Receivers for Remote Controls
Instruments, Terminals, and Bar-Code Readers
Smart-Card Readers

DESCRIPTION

The TS12011/TS12012 combine a 0.58V reference, a 20µs comparator, and a unity-gain stable op amp in a single IC. All three devices operate from a single 0.8V to 2.5V power supply and consume less than 1.6µA total supply current. Supply current for all three functions over 0.8V to 2.5V supply range is guaranteed 1.6µA max.

Super-flexible for crafting voltage detectors, timers, and wake-up circuits, these bundled functions exhibit low shoot-through currents and graceful power-down modes. Both the comparator and the op amp feature rail-to-rail input stages. The latching comparator exhibits ±7.5mV of internal hysteresis for clean, chatter-free output switching. When compared against similar products, the TS12011/TS12012 offer a factor-of-20 lower power consumption and at least a 55% reduction in pcb area.

The TS12011's comparator has a push-pull output stage with break-before-make switches for low shoot-through currents. The TS12012's comparator has an open-drain output having no parasitic diode to VDD, for interfacing to wired-OR or mixed-voltage logic.

The TS12011 and the TS12012 are fully specified over the -40°C to +85°C temperature range and each is available in a low-profile, 10-pin 2x2mm TDFN package with an exposed back-side paddle.

TYPICAL APPLICATION CIRCUIT

LATCHING THRESHOLD DETECTOR WITH GAIN

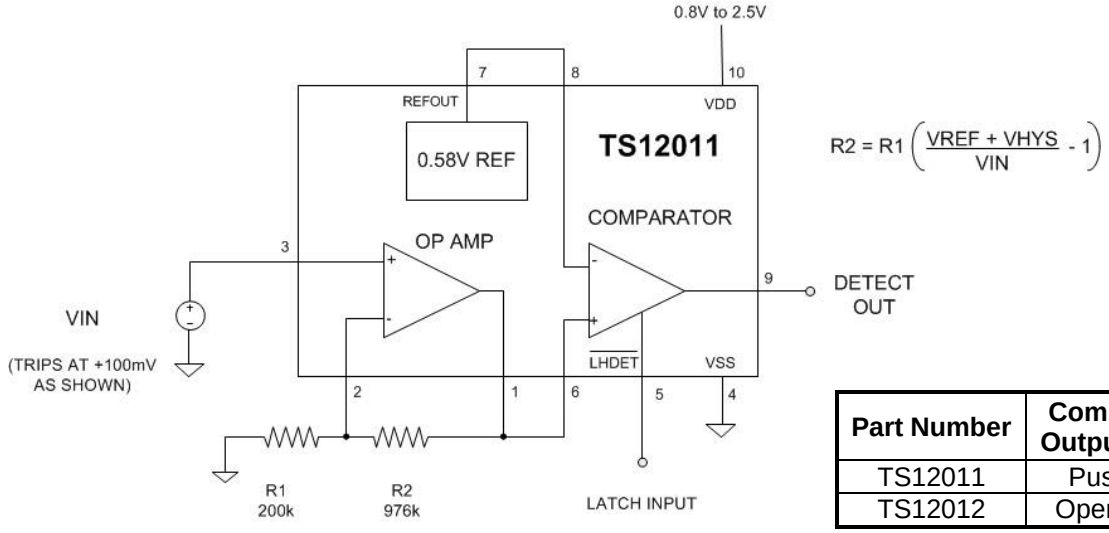

Part Number	Comparator Output Stage
TS12011	Push-pull
TS12012	Open-Drain

© 2014 Silicon Laboratories, Inc. All rights reserved.

ABSOLUTE MAXIMUM RATINGS

Supply Voltage (V_{DD} to V_{SS}) ..... +2.75 V
Input Voltage
AMPIN+, AMPIN-……V_{SS} – 0.3V to V_{DD} + 0.3V
COMPIN+, COMPIN-.....V_{SS} – 0.3V to V_{DD} + 0.3V
$\overline{\text{LHDET}}$…….…….. V_{SS} - 0.3V to +5.5V
Output Voltage
AMPOUT, REFOUT…….....V_{SS} – 0.3V to V_{DD} + 0.3V
COMPOUT (TS12011)…….....V_{SS} - 0.3V to V_{DD} + 0.3V
COMPOUT (TS12012)……..……V_{SS} - 0.3V to +5.5V
Differential Input Voltage (AMPIN, COMPIN)..... ±2.75V

Output Current
AMPOUT, COMPOUT…….....50mA
Short-Circuit Duration
(REFOUT, AMPOUT, COMPOUT)……..…Continuous
Continuous Power Dissipation (T_A = +70°C)
10-Pin TDFN (Derate at 13.48mW/°C above +70°C)..... 1078mW
Operating Temperature Range..... -40°C to +85°C
Junction Temperature……..……+150°C
Storage Temperature Range..... -65°C to +150°C
Lead Temperature (Soldering, 10s)..... +300°C

Electrical and thermal stresses beyond those listed under “Absolute Maximum Ratings” may cause permanent damage to the device. These are stress ratings only and functional operation of the device at these or any other condition beyond those indicated in the operational sections of the specifications is not implied. Exposure to any absolute maximum rating conditions for extended periods may affect device reliability and lifetime.

PACKAGE/ORDERING INFORMATION

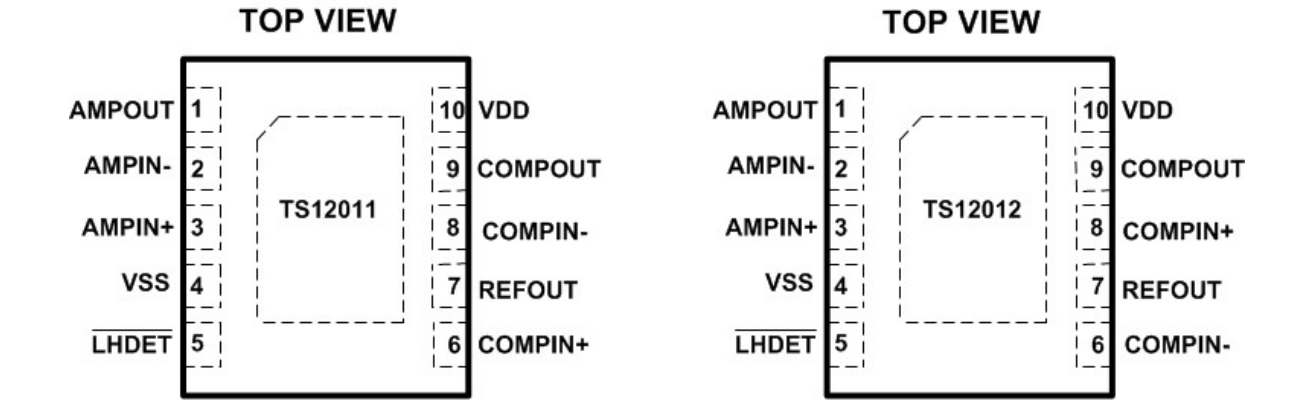

2mm x 2mm x 0.75mm DFN-EP 10L
TD1022 Package

ORDER NUMBER	PART MARKING	CARRIER	QUANTITY	ORDER NUMBER	PART MARKING	CARRIER	QUANTITY
TS12011ITD1022	AAL	Tape & Reel	-----	TS12012ITD1022	AAM	Tape & Reel	-----
TS12011ITD1022T		Tape & Reel	3000	TS12012ITD1022T		Tape & Reel	3000

Lead-free Program: Silicon Labs supplies only lead-free packaging.

Consult Silicon Labs for products specified with wider operating temperature ranges.

ELECTRICAL CHARACTERISTICS

V_{DD} = 0.8V; V_{SS} = 0V; $V_{COMPIN+/-}$ = 0V; $V_{AMPIN+/-}$ = 0V; V_{AMPOUT} = (V_{DD} + V_{SS})/2; $V_{COMPOUT}$ = HiZ; T_A = -40°C to +85°C, unless otherwise noted. Typical values are at T_A = +25°C. See note 1.

PARAMETER	SYMBOL	CONDITIONS		MIN	TYP	MAX	UNITS
Supply Voltage	V_{DD}			0.8		2.5	V
Supply Current	I_{DD}	REFOUT = open	T_A = +25°C		1.1	1.6	µA
			-40°C ≤ T_A ≤ 85°C			2	
REFERENCE SECTION							
Reference Output Voltage	V_{REFOUT}	V_{DD} = 0.8V or 2.5V	T_A = +25°C	555	577	600	mV
			-40°C ≤ T_A ≤ 85°C	552		602	
Reference Load Regulation		I_{OUT} = ±100nA				0.5	%
AMPLIFIER SECTION							
Input Offset Voltage	V_{OS}	$V_{AMPIN+/-}$ = V_{DD} or $V_{AMPIN+/-}$ = V_{SS}	T_A = +25°C			3.5	mV
			-40°C ≤ T_A ≤ 85°C			7	
Input Bias Current	I_{IN+}, I_{N-}	V_{AMPIN+}, V_{AMPIN-} = (V_{DD} – V_{SS})/2				20	nA
Input Offset Current	I_{OS}	V_{AMPIN+}, V_{AMPIN-} = (V_{DD} – V_{SS})/2			0.01	5	nA
Input Common-Mode Range	IVR	Guaranteed by Input Offset Voltage Test		V_{SS}		V_{DD}	V
Large-Signal Voltage Gain	A_{VOL}	R_L = 100K to V_{DD}/2; V_{SS} + 50mV < V_{OUT} < V_{DD} - 50mV		90	104		dB
Gain-Bandwidth Product	GBWP	R_L = 100kΩ//20pF			15		kHz
Phase Margin	φ_M	R_L = 100kΩ//20pF			70		deg
Slew Rate	SR	R_L = 100kΩ//20pF			6		V/ms
Common-Mode Rejection Ratio	CMRR	0V ≤ $V_{IN(CM)}$ ≤ 2.1V; V_{DD} = 2.5V		50	75		dB
Power-Supply Rejection Ratio	PSRR	0.65V ≤ (V_{DD} - V_{SS}) ≤ 2.5V		50	75		dB
Output High Voltage	V_{OH}	R_L = 100kΩ to V_{SS}		V_{DD} – 50mV			V
Output Low Voltage	V_{OL}	R_L = 100kΩ to V_{DD}				V_{SS} + 50mV	V
Output Source Current	I_{SC+}	V_{AMPOUT} = V_{SS}		0.28			mA
Output Sink Current	I_{SC-}	V_{AMPOUT} = V_{DD}		4.5			mA
Output Load Capacitive Drive	C_{OUT}				50		pF
COMPARATOR SECTION							
Input Offset Voltage	V_{OS}	$V_{AMPIN+/-}$ = V_{DD}; $V_{AMPIN+/-}$ = V_{SS}; See Note 2	T_A = +25°C			4.5	mV
			-40°C ≤ T_A ≤ 85°C			8	
Input Hysteresis	V_{HB}	See Note 3			±7.5		mV
Input Bias Current	I_{IN+}, I_{N-}	$V_{COMPIN+}$, $V_{COMPIN-}$ = V_{DD} or V_{SS}				20	nA
Input Offset Current	I_{OS}	$V_{COMPIN+}$, $V_{COMPIN-}$ = V_{DD} or V_{SS}			0.2	5	nA
Input Voltage Range	IVR	Guaranteed by Input Offset Voltage Test		V_{SS}		V_{DD}	V
Common-Mode Rejection Ratio	CMRR	0V ≤ $V_{IN(CM)}$ ≤ 2.1V; V_{DD} = 2.5V		50	60		dB
Power-Supply Rejection Ratio	PSRR	0.8V ≤ (V_{DD} - V_{SS}) ≤ 2.5V		50	70		dB
Low-to-High Propagation Delay	t_{PD+}	$V_{OVERDRIVE}$ = 10mV; See Note 4	TS12011		30		µs
		$V_{OVERDRIVE}$ = 100mV; See Note 4			20		µs
High-to-Low Propagation Delay	t_{PD-}	$V_{OVERDRIVE}$ = 10mV; See Note 4			30		µs
		$V_{OVERDRIVE}$ = 100mV; See Note 4			20		µs
Output High Voltage	V_{OH}	TS12011; I_{OUT} = -100µA		V_{DD} – 0.1			V
Output Low Voltage	V_{OL}	TS12011 ; I_{OUT} = 100µA				V_{SS} + 0.1	V
Output Low Voltage	V_{OL}	TS12012 ; I_{OUT} = 100µA				V_{SS} + 0.11	V
Output Short-Circuit Current	I_{SC}	Sourcing; $V_{COMPOUT}$ = V_{SS}		0.1			mA
		TS12011 ; Sinking; $V_{COMPOUT}$ = V_{DD}		0.5			mA
		TS12012 ; Sinking; $V_{COMPOUT}$ = V_{DD}			1.4		mA
Open Drain Leakage		TS12012 ; $V_{COMPOUT}$ = 5V				20	nA

V_{DD} = 0.8V, V_{SS} = 0V, $V_{COMPIN+/-}$ = 0V, $V_{AMPIN+/-}$ = 0V, V_{AMPOUT} = (V_{DD} + V_{SS})/2, $V_{COMPOUT}$ = HiZ. T_A = -40°C to +85°C, unless otherwise noted. Typical values are at T_A = +25°C. See note 1.

PARAMETER	SYMBOL	CONDITIONS		MIN	TYP	MAX	UNITS
CONTROL PIN SECTION							
$\overline{LHDET}$ Input Low Voltage	V_{IL}	Comparator Latched Output Enabled	0.8V ≤ V_{DD} ≤ 1.1V			0.1	V
			1.1V < V_{DD} ≤ 2.5V			0.2	
$\overline{LHDET}$ Input High Voltage	V_{IH}	Comparator Latched Output Disabled	0.8V ≤ V_{DD} ≤ 1.1V	V_{DD} - 0.1			V
			1.1V < V_{DD} ≤ 2.5V	1			
$\overline{LHDET}$ Input Leakage		$V_{\overline{LHDET}}$ = V_{SS}; $V_{\overline{LHDET}}$ = 5.5V				100	nA

Note 1: All devices are 100% production tested at T_A = +25°C and are guaranteed by characterization for T_A = T_{MIN} to T_{MAX}, as specified.
Note 2: V_{OS} is defined as the center of the hysteresis band at the input minus $V_{IN(CM)}$.
Note 3: The hysteresis-related trip points are defined by the edges of the hysteresis band and measured with respect to the center of the hysteresis band.
Note 4: The propagation delays are specified with an output load capacitance of C_L = 15pF. $V_{OVERDRIVE}$ is defined above and is beyond the offset voltage and hysteresis of the comparator input.

TYPICAL PERFORMANCE CHARACTERISTICS

V_{DD} = 2.5V; V_{SS} = 0V; V_{AMPOUT} = HiZ; $V_{COMPOUT}$ = HiZ, unless otherwise noted. Typical values are at T_A = +25°C.

Supply Current vs Supply Voltage and Temperature

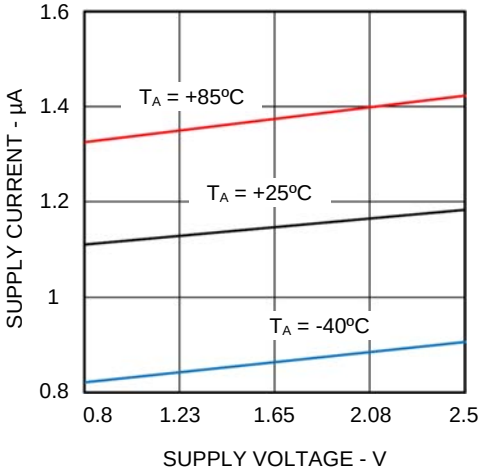

Reference Voltage vs Temperature

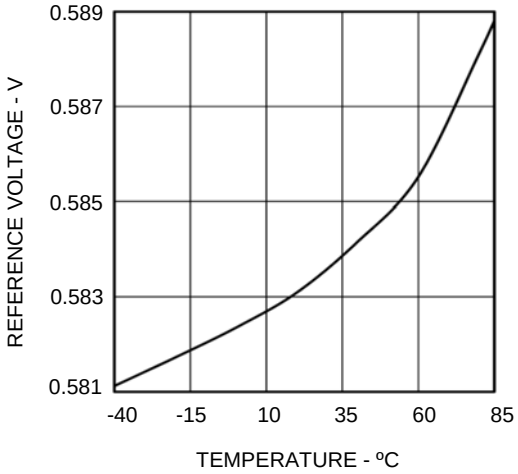

Op Amp Short-Circuit Current vs Supply Voltage

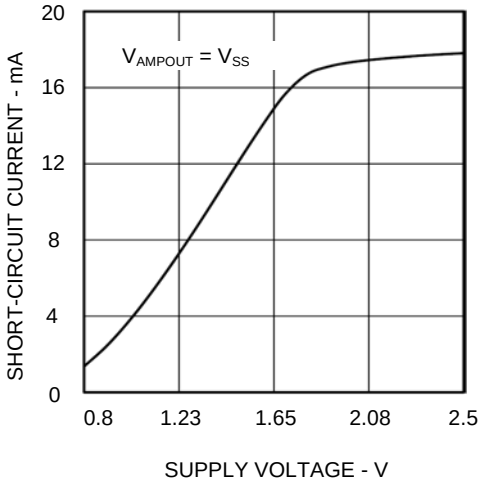

Comparator Short-Circuit Current vs Supply Voltage

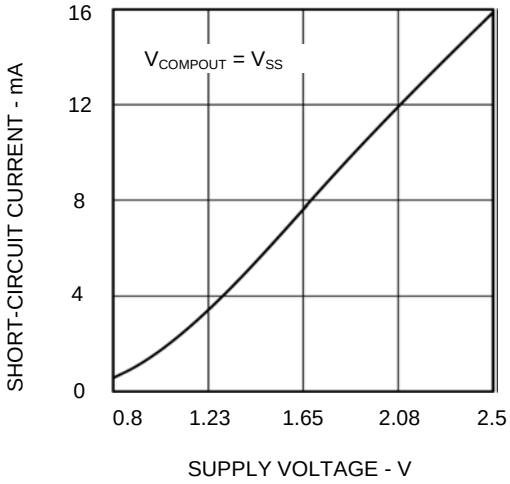

Op Amp Short-Circuit Current vs Supply Voltage

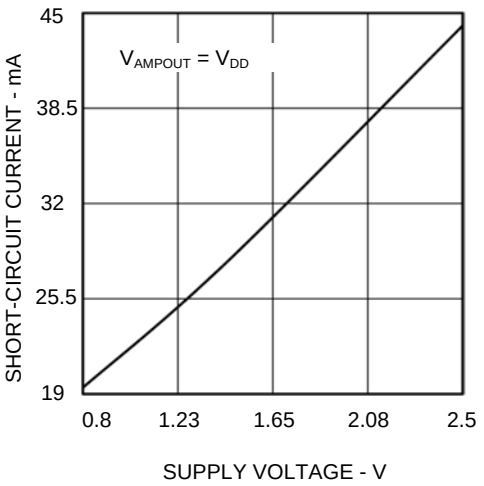

Comparator Short-Circuit Current vs Supply Voltage

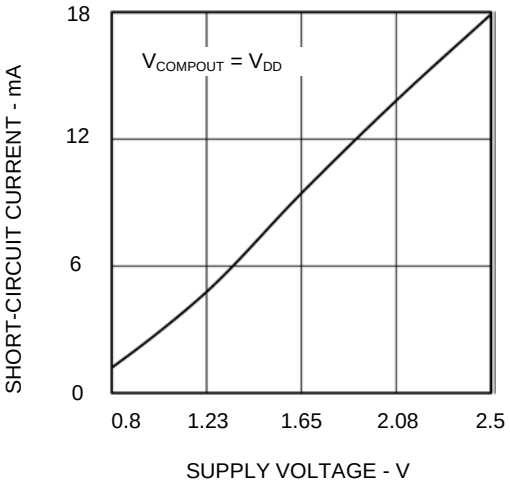

TYPICAL PERFORMANCE CHARACTERISTICS

V_{DD} = 2.5V; V_{SS} = 0V; V_{AMPOUT} = HiZ; $V_{COMPOUT}$ = HiZ, unless otherwise noted. Typical values are at T_A = +25°C.

Comparator Output Voltage High vs Source Current

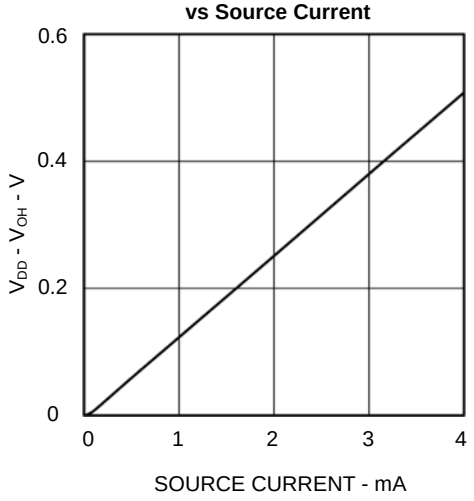

Comparator Output Voltage Low vs Sink Current

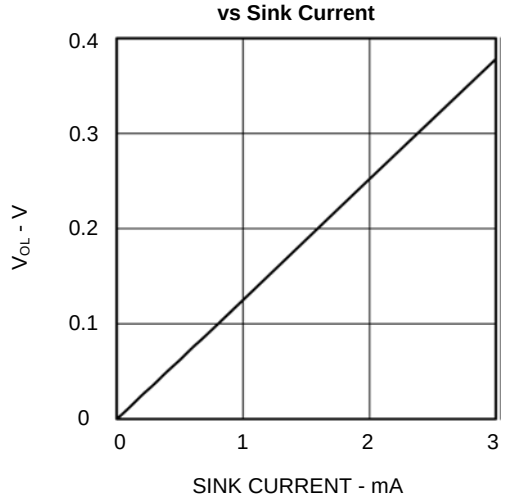

Op Amp Output Voltage High vs Source Current

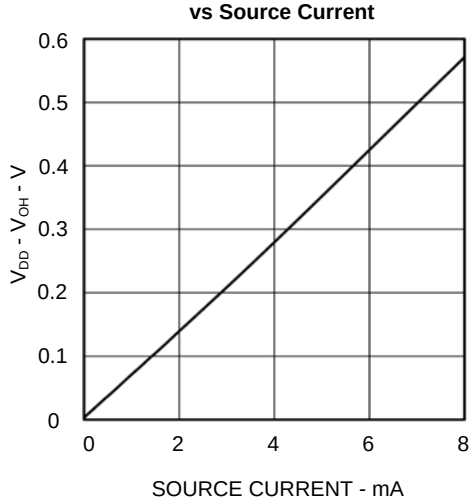

Op Amp Output Voltage Low vs Sink Current

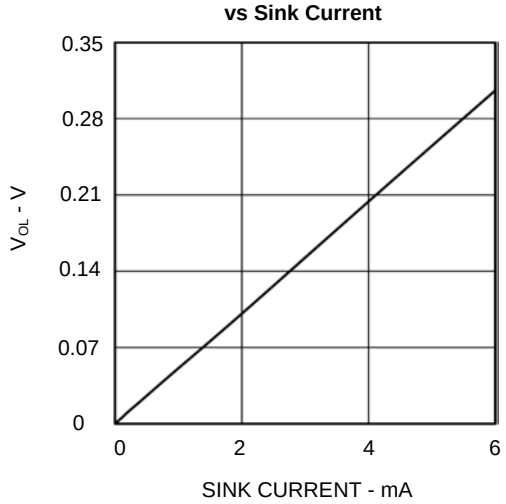

Op Amp Input Offset Voltage vs Supply Voltage

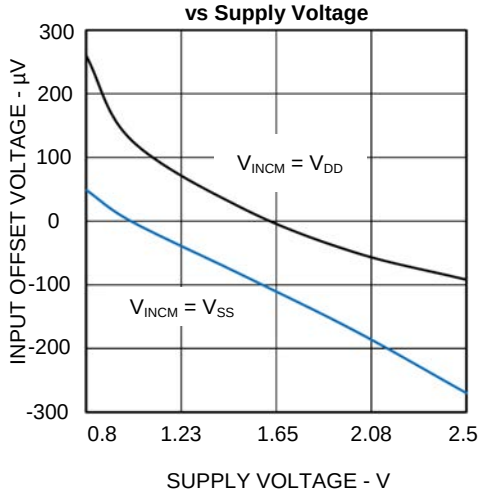

Comparator Input Offset Voltage vs Supply Voltage

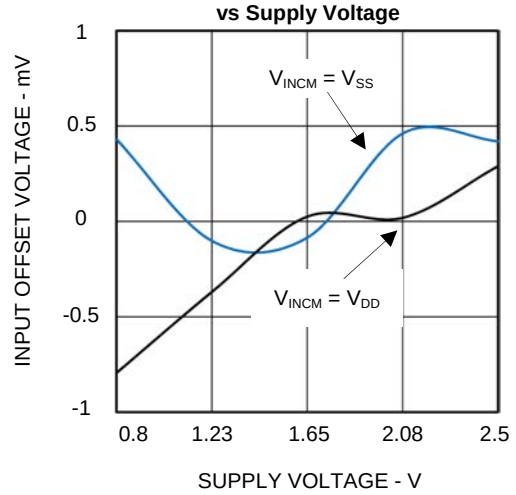

TYPICAL PERFORMANCE CHARACTERISTICS

V_{DD} = 2.5V; V_{SS} = 0V; V_{AMPOUT} = HiZ; $V_{COMPOUT}$ = HiZ, unless otherwise noted. Typical values are at T_A = +25°C.

Op Amp Input Offset Voltage vs Input Common-Mode Voltage

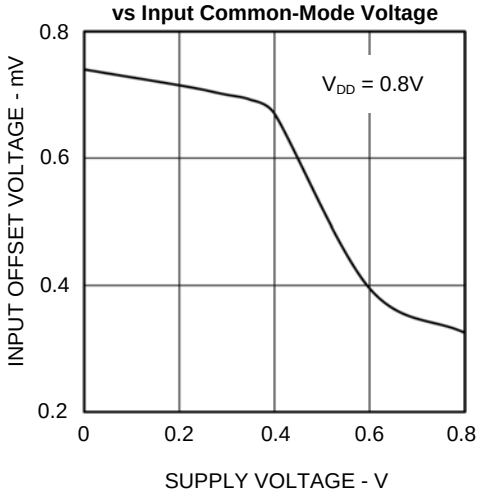

Op Amp Input Offset Voltage vs Input Common-Mode Voltage

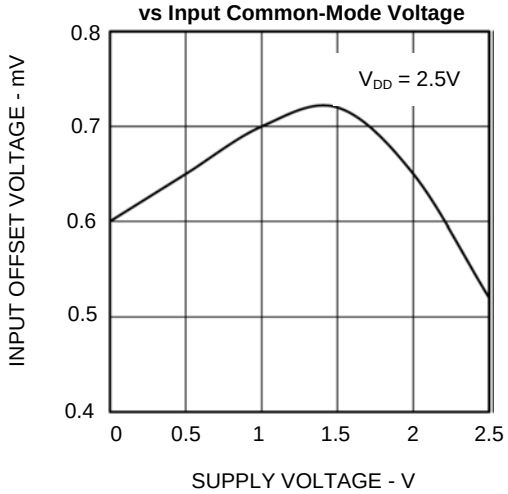

TS12011
Op Amp Small-Signal Transient Response
V_{DD} = 2.5V, R_{LOAD} = 100kΩ, C_{LOAD} = 15pF

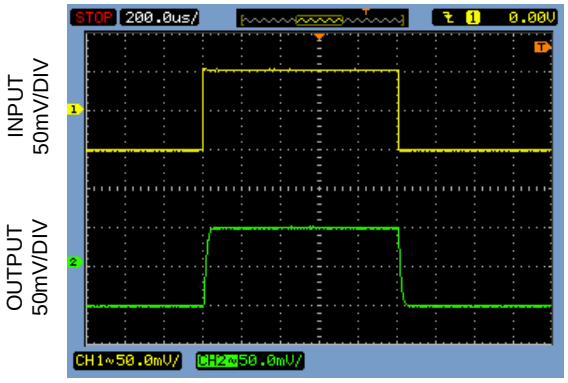

200µs/DIV

TS12011
Op Amp Large Signal Transient Response
V_{DD} = 2.5V, R_{LOAD} = 100kΩ, C_{LOAD} = 15pF

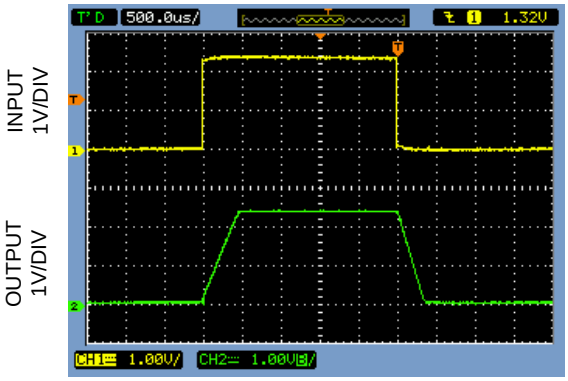

500µs/DIV

TS12011
Comparator Propagation Delay (T_{PD+})
V_{DD} = 2.5V, $V_{OVERDRIVE}$ = 100mV, C_{LOAD} = 15pF

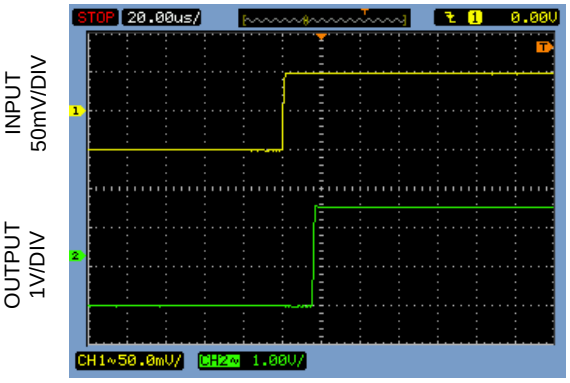

20µs/DIV

TS12011
Comparator Propagation Delay (T_{PD-})
V_{DD} = 2.5V, $V_{OVERDRIVE}$ = 100mV, C_{LOAD} = 15pF

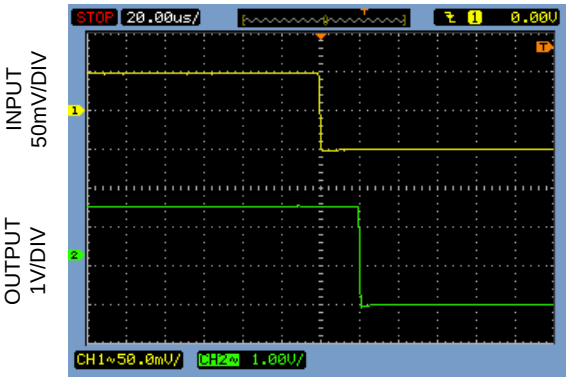

20µs/DIV

TYPICAL PERFORMANCE CHARACTERISTICS

V_{DD} = 2.5V; V_{SS} = 0V; V_{AMPOUT} = HiZ; $V_{COMPOUT}$ = HiZ, unless otherwise noted. Typical values are at T_A = +25°C.

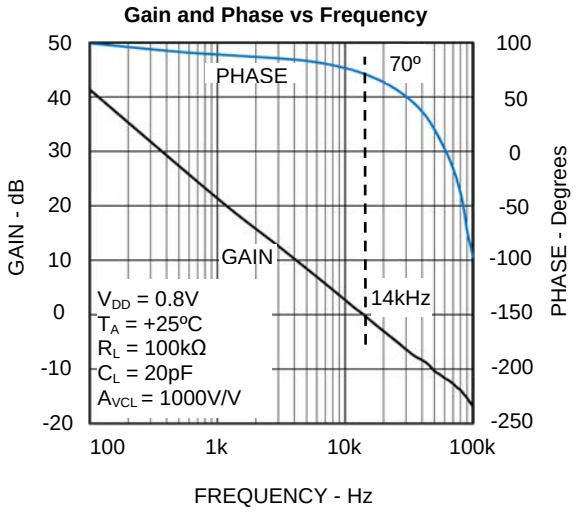

PIN FUNCTIONS

PIN TS12011	PIN TS12012	NAME	FUNCTION
1	1	AMPOUT	Amplifier Output
2	2	AMPIN-	Amplifier Inverting Input
3	3	AMPIN+	Amplifier Non-inverting Input
4	4	VSS	Negative Supply Voltage.
5	5	$\overline{\text{LHDET}}$	Latch Enable Pin, active low. Tie to VDD for normal operation. Do not leave floating. See Latch Truth Tables below.
6	8	COMPIN+	Comparator Non-inverting Input
7	7	REFOUT	0.58V Reference Output
8	6	COMPIN-	Comparator Inverting Input
9	9	COMPOUT	Comparator Output. TS12011: push-pull TS12012: open-drain
10	10	VDD	Positive Supply Voltage. Connect a 0.1µF bypass capacitor from this pin to analog VSS/GND.
EP	EP	----	Exposed paddle is electrically connected to VSS/GND.

BLOCK DIAGRAM

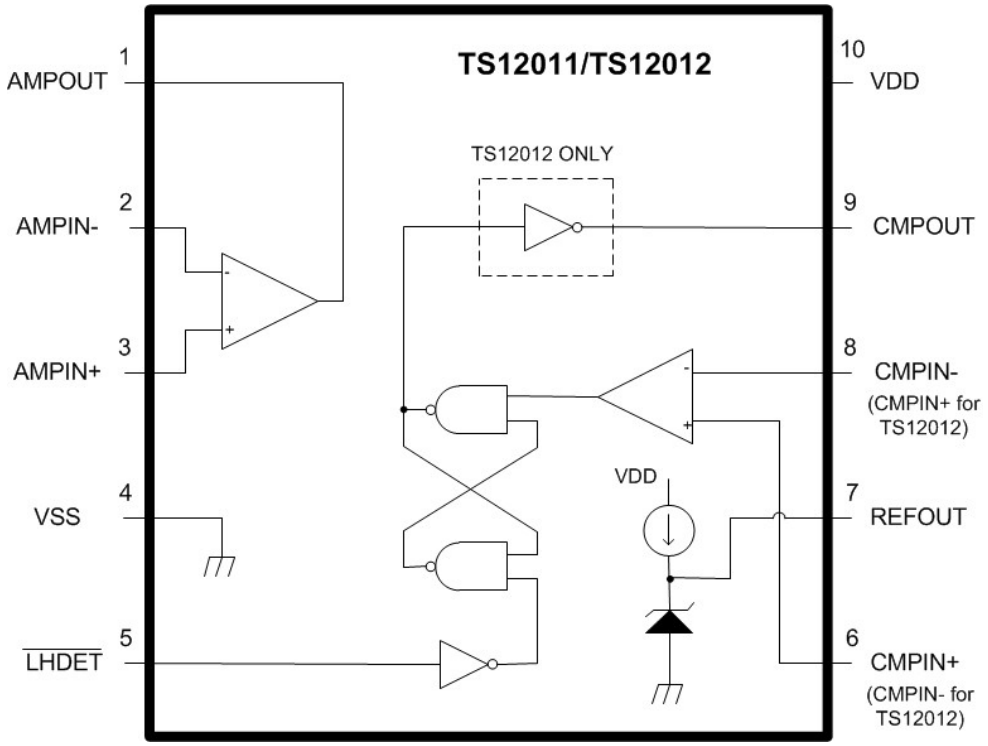

THEORY OF OPERATION

The TS12011 and TS12012 are multi-purpose CMOS building blocks intended for creating analog glue functions around battery-powered uC systems. There is an op amp for signal conditioning, a comparator for detection, and a reference to establish detection threshold levels. It's possible to build a wide variety of timers, event detectors, regulators, and voltage monitors using these flexible uncommitted blocks.

Optimized for low-voltage operation, these devices draw less than 1.6uA total from a 0.8V to 2.5V supply. The op amp and comparator blocks typically continue to function down to less than 0.5V (REFOUT will go into dropout, however).

Comparator

The comparator block is designed for high gain and chatter-free output switching in noisy environments. The comparator inputs have rail-to-rail VIN range, and exhibit +/-7.5mV of hysteresis. The only difference between the two device types is in the output stage of the comparator. The TS12011 has a push-pull output and latches in the high state. The TS12012 has an open-drain output, latches in the low state, and can tolerate pull-up voltages higher than the supply (up to 5.5V absolute max above VSS/GND).

TS12011 push-pull output driver was designed to minimize supply-current surges while driving ±100µA loads with an output swing to within 100mV of the supply rails. The TS12011 and the TS12012 can sink 0.5mA and 1.4mA of current, respectively. The TS12011 can source 0.1mA of current.

The non-traditional latch function works to detect and latch changes in the input state. If the $\overline{\text{LHDET}}$ control input is enabled, the output will latch high (low for the TS12012) whenever the differential input voltage is high enough to force a change in that direction. If the differential voltage is in the wrong direction to force a

change, the comparator stays active and waits for the crossing, at which point it will latch in its final state.

An internal POR circuit ensures that the latch powers up in the "comparator active" state if $\overline{LHDET}$ is low when VDD is first applied.

Latch Truth Table – TS12011

$\overline{LHDET}$	CMPOUT initial state	CMPIN+ to CMPIN- difference voltage	CMPOUT
HIGH	X	N/A	Normal operation
LOW	HIGH	X	HIGH (latched)
LOW	LOW	negative	LOW (comparator active)
LOW	LOW	positive	HIGH (latched)

X = Don't Care

Latch Truth Table – TS12012

$\overline{LHDET}$	CMPOUT initial state	CMPIN+ to CMPIN- difference voltage	CMPOUT
HIGH	X	N/A	Normal operation
LOW	LOW	X	LOW (latched)
LOW	HIGH	positive	HIGH (comparator active)
LOW	HIGH	negative	LOW (latched)

X = Don't Care

Reference

The TS12011 and TS12012 on-board 0.58V ±4.5% reference voltage can source and sink 0.1µA and 0.1µA of current and can drive a capacitive load less than 50pF and greater than 50nF with a maximum capacitive load of 250nF. The higher the capacitive load, the lower the noise on the reference voltage and the longer the time needed for the reference voltage to respond and become available on the REFOUT pin. With a 250nF capacitive load, the reference voltage will settle to within specifications in approximately 20ms.

Op Amp

The TS12011 and TS12012 have a unity-gain stable op-amp with a GBWP of 15kHz, a slew rate of 6V/ms, and can drive a capacitive load up to 50pF. The common mode input voltage range extends from V_{SS} to V_{DD} and the input bias current and offset current are less than 20nA and 2nA, respectively.

Op-Amp Stability

The TS12011 and TS12012 op-amp is able to drive up to 50pF of capacitive load and still maintain stability in a unity-gain configuration with a 15kHz GBWP and a phase margin of 70 degrees with a 100kΩ//20pF output load.

Though the TS12011 and TS12012 address low frequency applications, it is essential to perform good layout techniques in order to minimize board leakage and stray capacitance, which is of a concern in low power, high impedance circuits. For instance, a 10MΩ resistor coupled with a 1pF stray capacitance can lead to a pole at approximately 15kHz, which is the GBWP of the device. If stray capacitance is unavoidable, a feedback capacitor can be placed in parallel with the feedback resistor.

APPLICATIONS INFORMATION

Comparator Hysteresis

As a result of circuit noise or unintended parasitic feedback, many analog comparators often break into oscillation within their linear region of operation especially when the applied differential input voltage approaches 0V (zero volt). Externally-introduced hysteresis is a well-established technique for stabilizing analog comparator behavior and requires external components. As shown in Figure 1, adding comparator hysteresis creates two trip points: V_{THR} (for the rising input voltage) and V_{THF} (for the falling input voltage). The hysteresis band (V_{HB}) is defined as the voltage difference between the two trip points. When a comparator's input voltages are equal, hysteresis effectively forces one comparator input to move quickly past the other input, moving the input out of the region where oscillation occurs. Figure 1 illustrates the case in which an IN- input is a fixed voltage and an IN+ is varied. If the input signals were reversed, the figure would be the same with an inverted output. To save cost and external pcb area, an internal ±7.5mV hysteresis circuit was added to the TS12011 and TS12012.

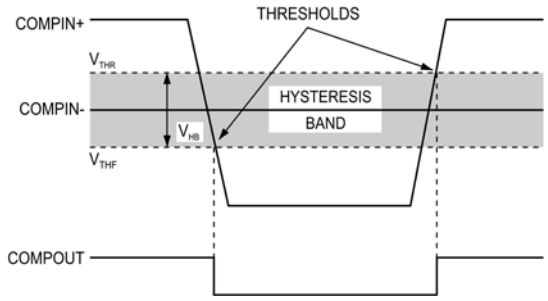

Figure 1. TS12011/TS12012 Threshold Hysteresis Band

Adding Hysteresis to the TS12011 Push-pull Output Option

Additional hysteresis can be generated with three external resistors using positive feedback as shown in Figure 2. Unfortunately, this method also reduces the hysteresis response time. The procedure to calculate the resistor values for the TS12011 is as follows:

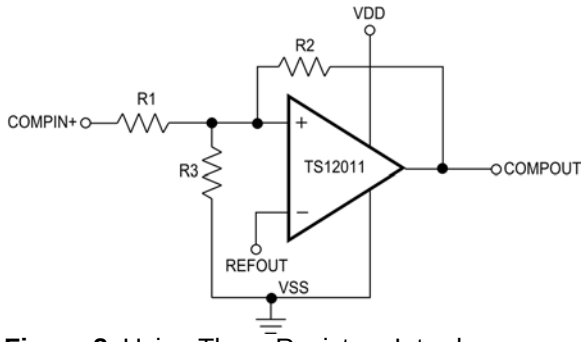

Figure 2. Using Three Resistors Introduces Additional Hysteresis in the TS12011

1) Setting R2. As the leakage current at the IN pin is less than 20nA, the current through R2 should be at least 150nA to minimize offset voltage errors caused by the input leakage current. The current through R2 at the trip point is (V_{REFOUT} - $V_{COMPOUT}$)/R2.

   In solving for R2, there are two formulas – one each for the two possible output states:

   $R2 = V_{REFOUT}/I_{R2}$

   or

   $R2 = (V_{DD} - V_{REFOUT})/I_{R2}$

   From the results of the two formulae, the smaller of the two resulting resistor values is chosen. For example, when using the TS12011 (V_{REFOUT} = 0.58V) at a V_{DD} = 2.5V and if I_{R2} = 150nA is chosen, then the formulae above produce two resistor values: 3.87MΩ and 12.8MΩ - a 4.02MΩ standard value for R2 is selected.

2) Next, the desired hysteresis band (V_{HYSB}) is set. In this example, V_{HYSB} is set to 100mV.

3) Resistor R1 is calculated according to the following equation:

   $R1 = R2 \times (V_{HYSB}/V_{DD})$

   and substituting the values selected in 1) and 2) above yields:

   R1 = 4.02MΩ x (100mV/2.5V) = 160.8kΩ.

   The 160kΩ standard value for R1 is chosen.

4) The trip point for COMPIN+ rising (V_{THR}) is chosen such that $V_{THR} > V_{REFOUT} \times (R1 + R2)/R2$ (V_{THF} is the trip point for $V_{COMPIN+}$ falling). This is the threshold voltage at which the comparator switches its output from low to high as $V_{COMPIN+}$ rises above the trip point. In this example, V_{THR} is set to 2.

5) With the V_{THR} from Step 4 above, resistor R3 is then computed as follows:

   $R3 = 1/[V_{THR}/(V_{REFOUT} \times R1) - (1/R1) - (1/R2)]$

   R3 = 1/[2V/(0.58V x 160kΩ) - (1/160kΩ) - (1/4.02MΩ)] = 66.43kΩ

   In this example, a 69.8kΩ, 1% standard value resistor is selected for R3.

6) The last step is to verify the trip voltages and hysteresis band using the standard resistance values:

   For $V_{COMPIN+}$ rising:

   $V_{THR} = V_{REFOUT} \times R1\ [(1/R1) + (1/R2) + (1/R3)]$ = 1.93V

   For $V_{COMPIN+}$ falling:

   $V_{THF} = V_{THR} - (R1 \times V_{DD}/R2)$ = 1.83V

   and Hysteresis Band = $V_{THR} – V_{THF}$ = 100mV

Adding Hysteresis to the TS12012 Open-Drain Option

The TS12012 has open-drain output and requires an external pull-up resistor to V_{DD} as shown in Figure 3.

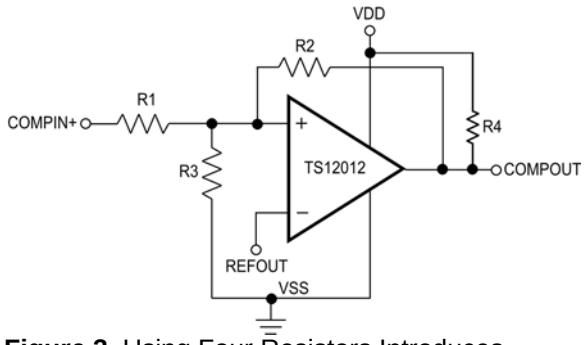

Figure 3. Using Four Resistors Introduces Additional Hysteresis in the TS12012

Additional hysteresis can be generated using positive feedback; however, the formulae differ slightly from those of the push-pull option TS12011. The procedure to calculate the resistor values for the TS12012 is as follows:

1) As in the previous section, resistor R2 is chosen according to the formulae:

   $R2 = V_{REFOUT}/150nA$

   or

   $R2 = (V_{DD} - V_{REFOUT})/150nA - R4$

   where the smaller of the two resulting resistor values is the best starting value.

2) As before, the desired hysteresis band (V_{HYSB}) is set to 100mV.

3) Next, resistor R1 is then computed according to the following equation:

   $R1 = (R2 + R4) \times (V_{HYSB}/V_{DD})$

4) The trip point for $V_{COMPIN+}$ rising (V_{THR}) is chosen (again, remember that V_{THF} is the trip point for $V_{COMPIN+}$ falling). This is the threshold voltage at which the comparator switches its output from low to high as $V_{COMPIN+}$ rises above the trip point.

5) With the V_{THR} from Step 4 above, resistor R3 is computed as follows:

   $R3 = 1/[V_{THR}/(V_{REFOUT} \times R1) - (1/R1) - (1/R2)]$

6) As before, the last step is to verify the trip voltages and hysteresis band with the standard resistor values used in the circuit:

   For $V_{COMPIN+}$ rising:

   $V_{THR} = V_{REFOUT} \times R1 \times (1/R1+1/R2+1/R3)$

   For $V_{COMPIN+}$ falling:

   $V_{THF} = V_{REFOUT} \times R1 \times (1/R1+1/R3+1/(R2+R4)) -(R1/(R2+R4)) \times V_{DD}$

   and Hysteresis Band is given by $V_{THR} – V_{THF}$

PC Board Layout and Power-Supply Bypassing

While power-supply bypass capacitors are not typically required, it is good engineering practice to use 0.1uF bypass capacitors close to the device's power supply pins when the power supply impedance is high, the power supply leads are long, or there is excessive noise on the power supply traces. To reduce stray capacitance, it is also good engineering practice to make signal trace lengths as short as possible. Also recommended are a ground plane and surface mount resistors and capacitors.

Input Noise

Radiated noise is common in low power circuits that require high impedance circuits. To minimize this effect, all traces between the inputs of the comparator or op-amp and passive component networks should be made as short as possible.

Pilot Light Flame Detector with Low-Battery Lockout Circuit

The TS12011 can be used to create a pilot flame detector with low-battery lockout circuit as shown in Figure 4. The circuit is able to detect when the thermocouple does not detect the pilot flame and when the battery in the circuit drops to 1.39V. This circuit makes use of the op-amp, comparator, and 0.58V reference in the TS12011. In this example, a type R thermocouple is used. It generates a voltage range from 9mV to 17mV that corresponds to a temperature range of 900ºC to 1500ºC, which is typical of a methane pilot flame. If the pilot flame is removed, the temperature drops; hence, the output voltage generated by the thermocouple is drops to a minimum voltage of 0.1mV that is applied to the non-

inverting input of the op-amp. This switches the output voltage of the op-amp to a LOW state and in turn, switches Q1 off. If, however, the battery voltage drops from 1.5V to 1.39V, the comparator output will switch from an output HIGH to a LOW. This will turn off Q2 and the output of the op-amp will turn Q1 off. The complete circuit consumes approximately 95µA of supply current at V_{DD} = 1.5V.

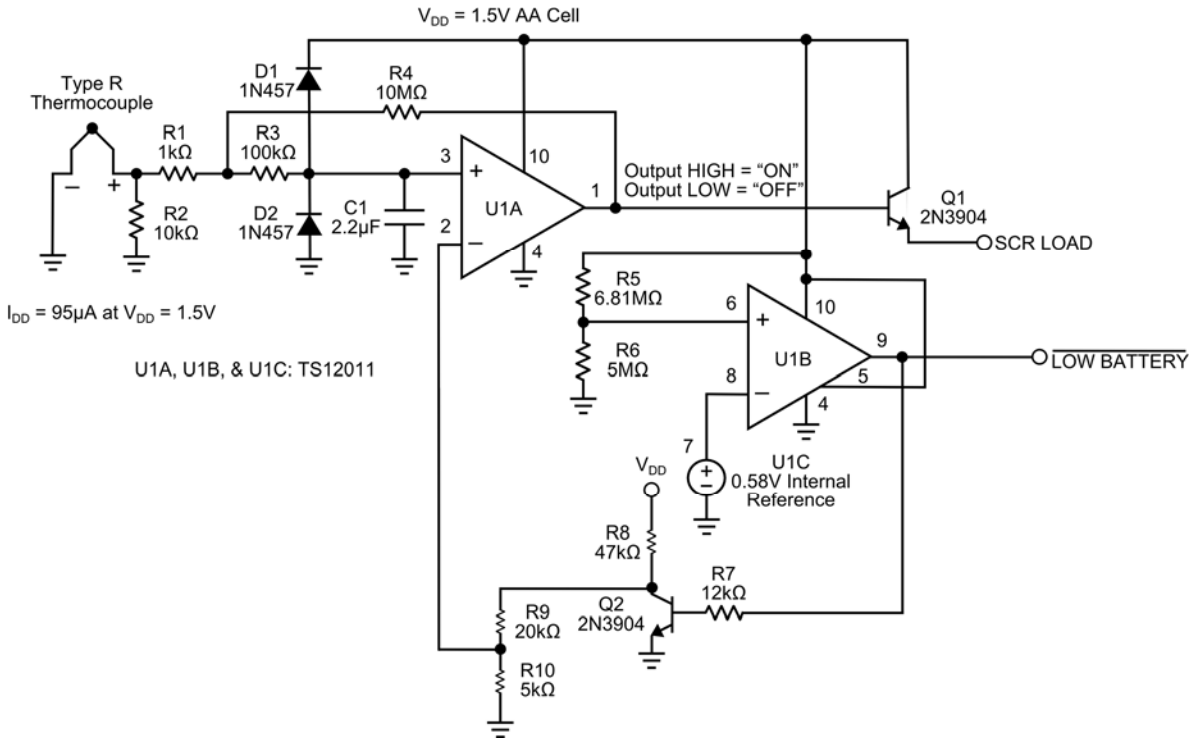

Figure 4. Pilot Light Flame Detector with Low-Battery Lockout Circuit

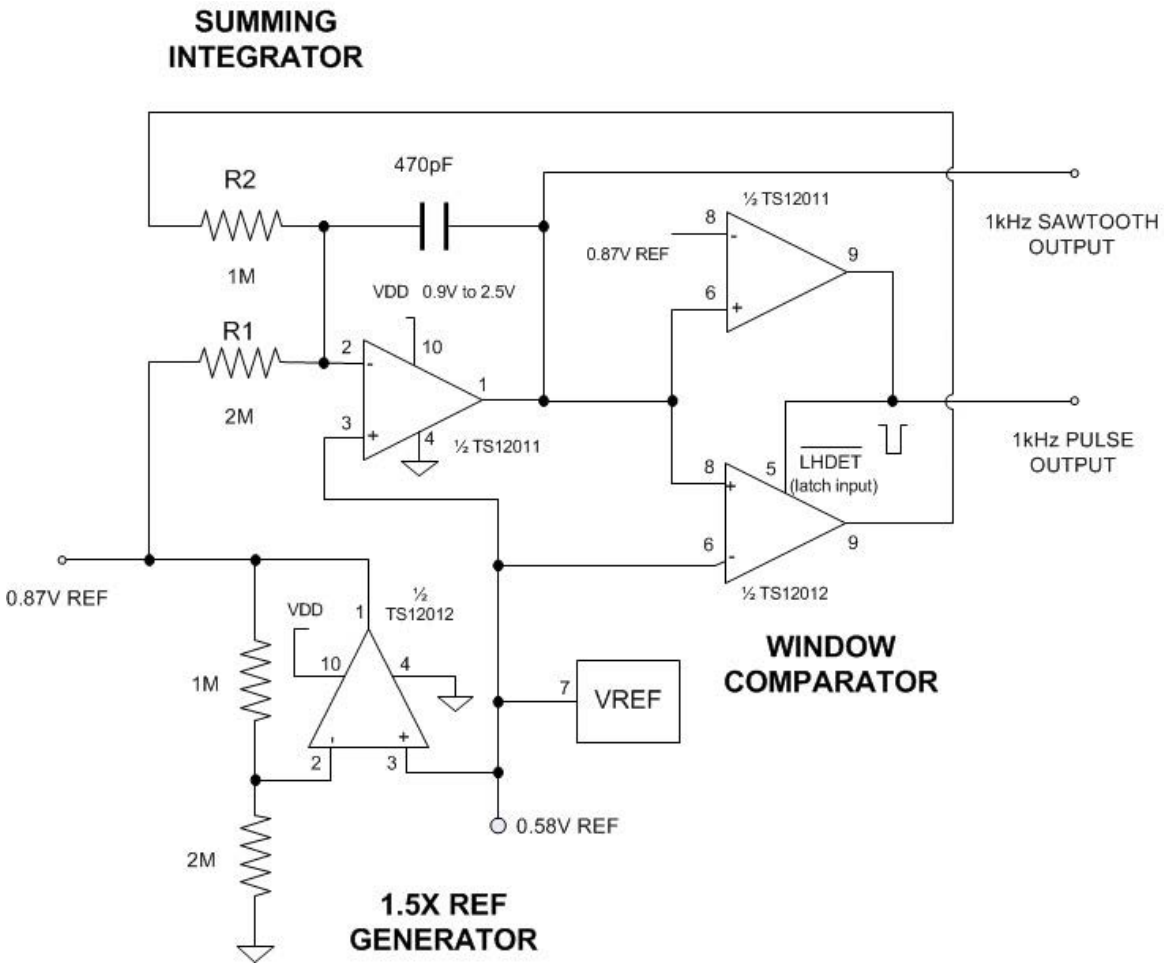

Figure 5. Sawtooth/Triangle Generator with Stable Frequency and Amplitude

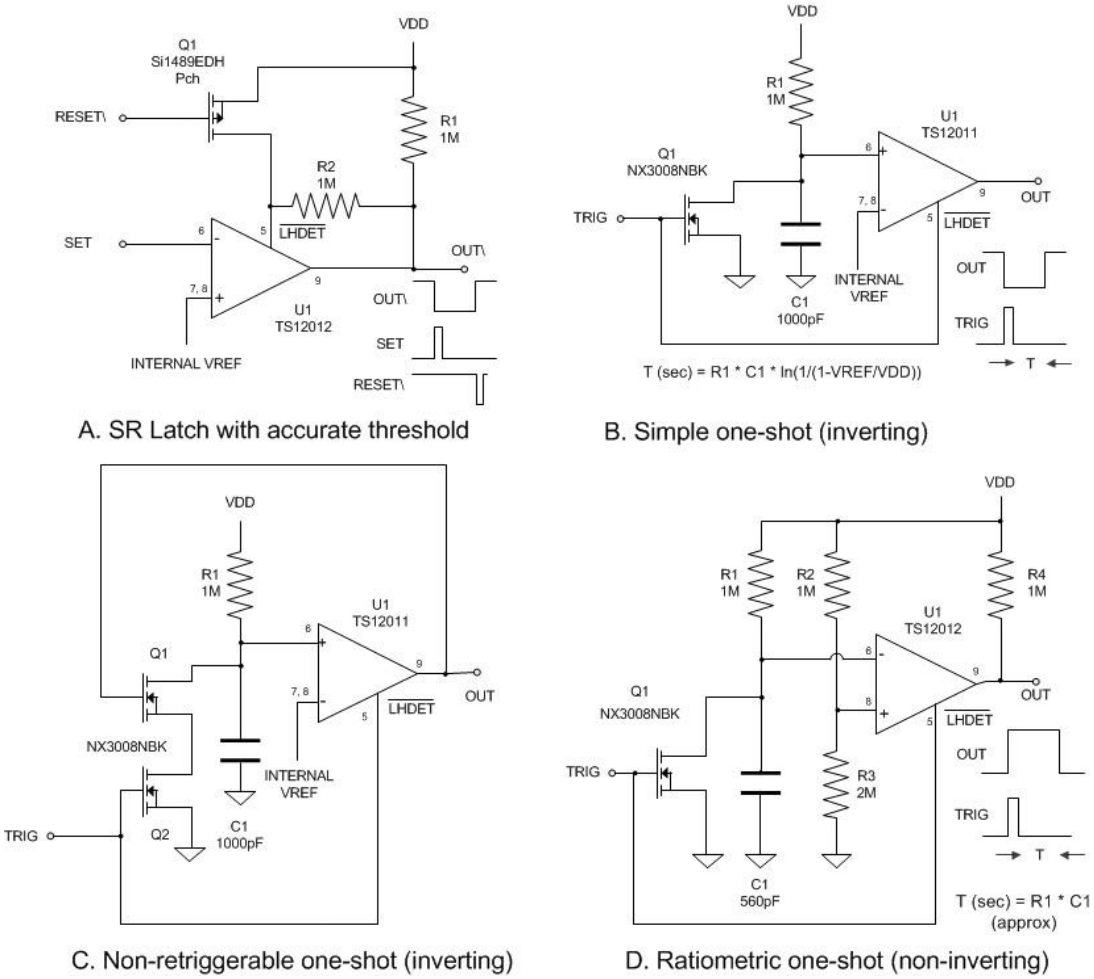

Figure 6. Low-power One-shot and Latch Circuits

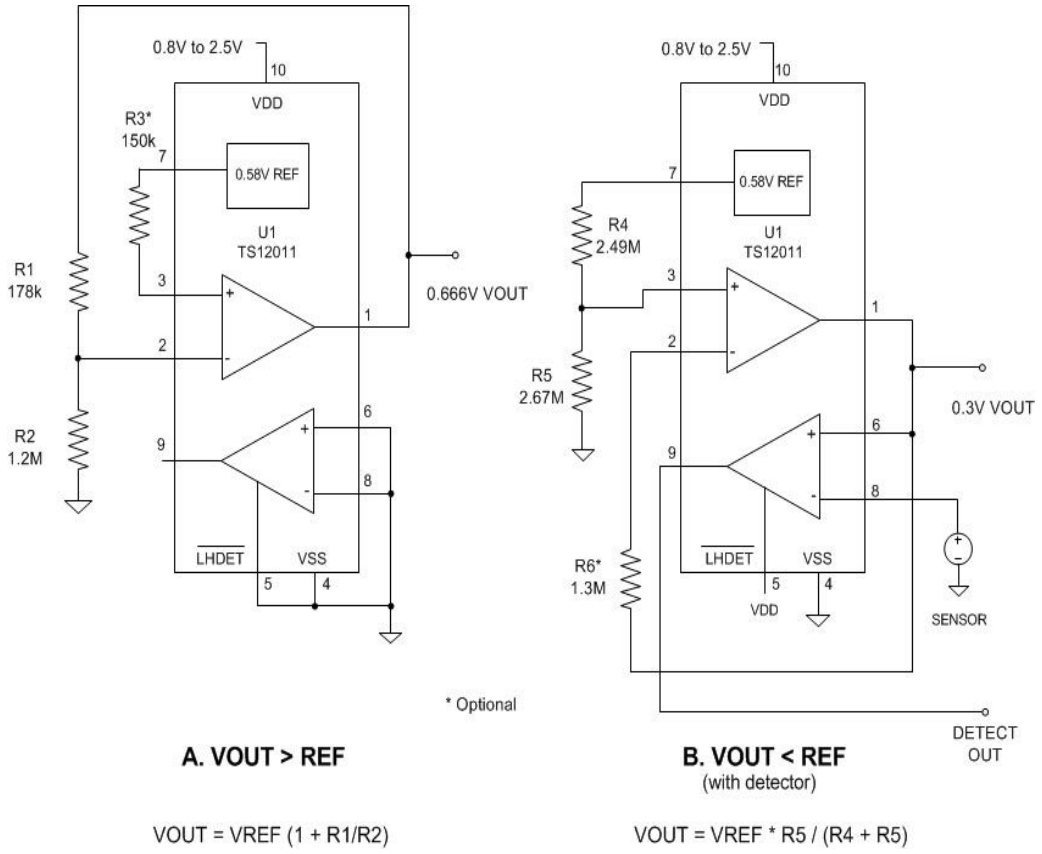

Figure 7. Adjustable Buffered Reference Generators

PACKAGE OUTLINE DRAWING

10-Pin TDFN22 Package Outline Drawing

(N.B., Drawings are not to scale)

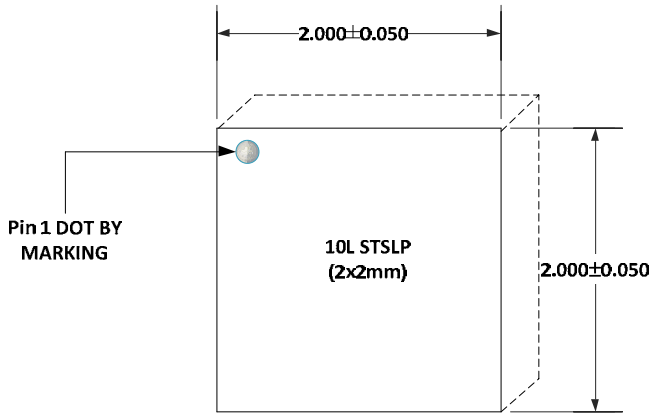

TOP VIEW

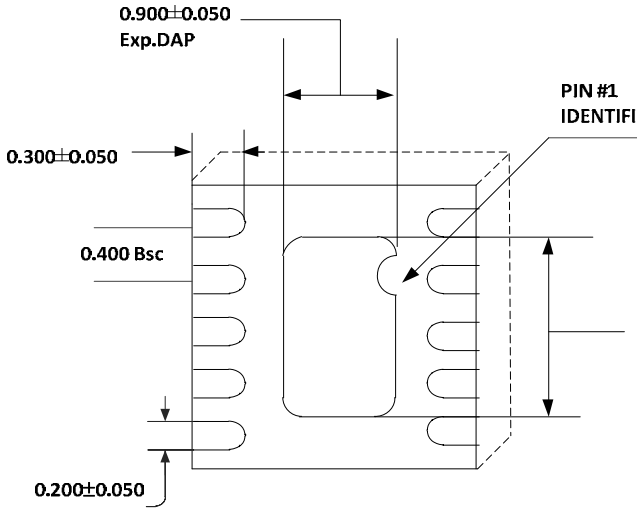

BOTTOM VIEW

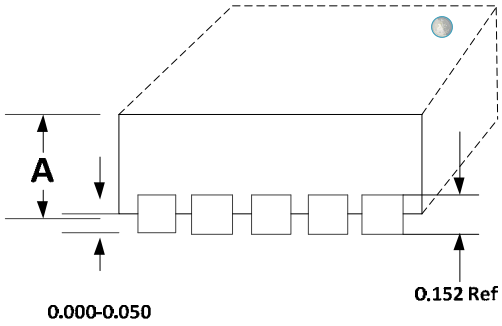

SIDE VIEW

NOTE!

- All dimensions in mm.
- This part is compliant with JEDEC MO-22

A	MAX.	0.600
	NOM.	0.550
	MIN.	0.500

Patent Notice

Silicon Labs invests in research and development to help our customers differentiate in the market with innovative low-power, small size, analog-intensive mixed-signal solutions. Silicon Labs' extensive patent portfolio is a testament to our unique approach and world-class engineering team.

The information in this document is believed to be accurate in all respects at the time of publication but is subject to change without notice. Silicon Laboratories assumes no responsibility for errors and omissions, and disclaims responsibility for any consequences resulting from the use of information included herein. Additionally, Silicon Laboratories assumes no responsibility for the functioning of undescribed features or parameters. Silicon Laboratories reserves the right to make changes without further notice. Silicon Laboratories makes no warranty, representation or guarantee regarding the suitability of its products for any particular purpose, nor does Silicon Laboratories assume any liability arising out of the application or use of any product or circuit, and specifically disclaims any and all liability, including without limitation consequential or incidental damages. Silicon Laboratories products are not designed, intended, or authorized for use in applications intended to support or sustain life, or for any other application in which the failure of the Silicon Laboratories product could create a situation where personal injury or death may occur. Should Buyer purchase or use Silicon Laboratories products for any such unintended or unauthorized application, Buyer shall indemnify and hold Silicon Laboratories harmless against all claims and damages.

Silicon Laboratories and Silicon Labs are trademarks of Silicon Laboratories Inc.
Other products or brandnames mentioned herein are trademarks or registered trademarks of their respective holders.

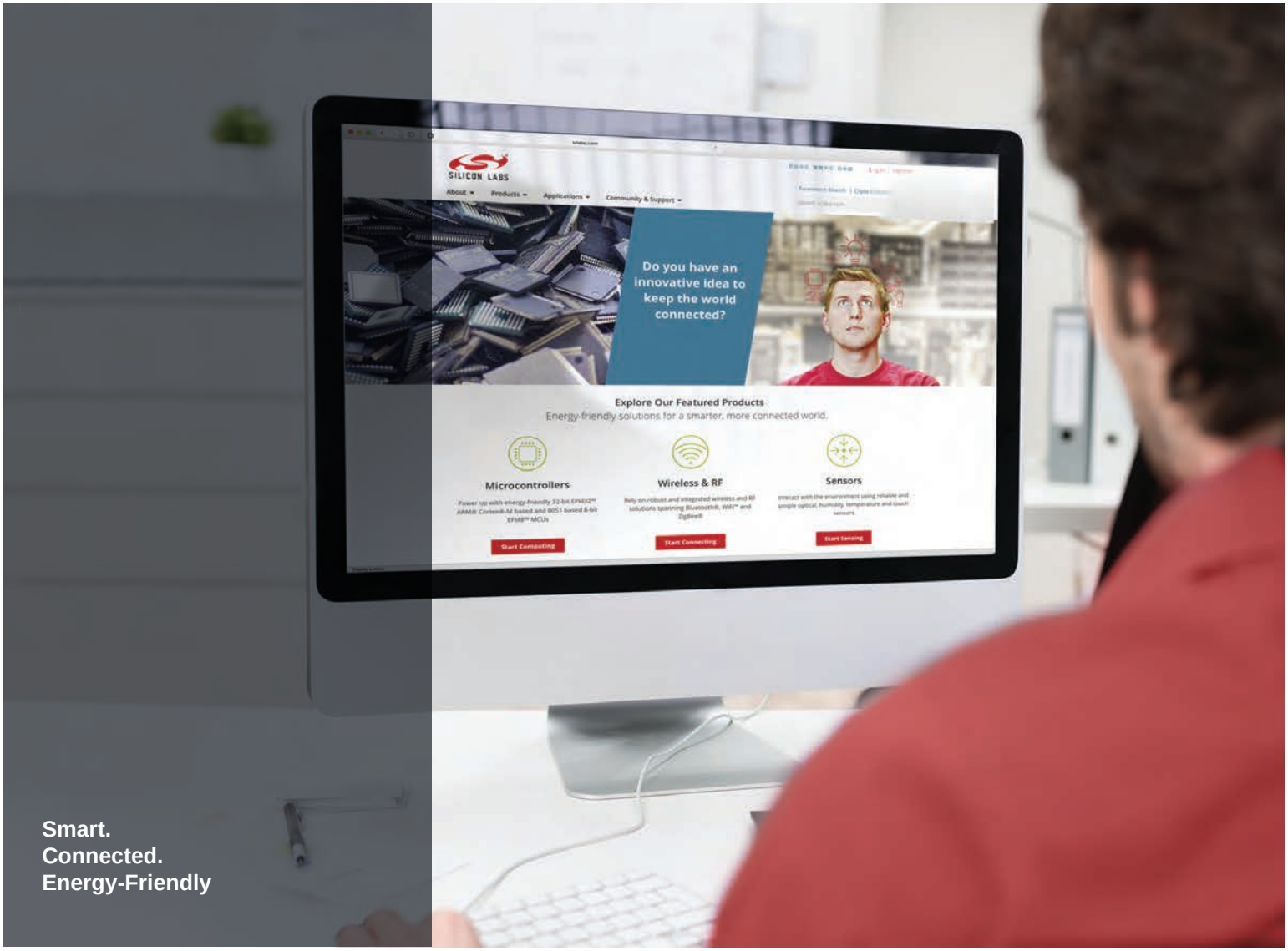

Products
www.silabs.com/products

Quality
www.silabs.com/quality

Support and Community
community.silabs.com

Disclaimer
Silicon Laboratories intends to provide customers with the latest, accurate, and in-depth documentation of all peripherals and modules available for system and software implementers using or intending to use the Silicon Laboratories products. Characterization data, available modules and peripherals, memory sizes and memory addresses refer to each specific device, and "Typical" parameters provided can and do vary in different applications. Application examples described herein are for illustrative purposes only. Silicon Laboratories reserves the right to make changes without further notice and limitation to product information, specifications, and descriptions herein, and does not give warranties as to the accuracy or completeness of the included information. Silicon Laboratories shall have no liability for the consequences of use of the information supplied herein. This document does not imply or express copyright licenses granted hereunder to design or fabricate any integrated circuits. The products must not be used within any Life Support System without the specific written consent of Silicon Laboratories. A "Life Support System" is any product or system intended to support or sustain life and/or health, which, if it fails, can be reasonably expected to result in significant personal injury or death. Silicon Laboratories products are generally not intended for military applications. Silicon Laboratories products shall under no circumstances be used in weapons of mass destruction including (but not limited to) nuclear, biological or chemical weapons, or missiles capable of delivering such weapons.

Trademark Information
Silicon Laboratories Inc., Silicon Laboratories, Silicon Labs, SiLabs and the Silicon Labs logo, CMEMS®, EFM, EFM32, EFR, Energy Micro, Energy Micro logo and combinations thereof, "the world's most energy friendly microcontrollers", Ember®, EZLink®, EZMac®, EZRadio®, EZRadioPRO®, DSPLL®, ISOmodem ®, Precision32®, ProSLIC®, SiPHY®, USBXpress® and others are trademarks or registered trademarks of Silicon Laboratories Inc. ARM, CORTEX, Cortex-M3 and THUMB are trademarks or registered trademarks of ARM Holdings. Keil is a registered trademark of ARM Limited. All other products or brand names mentioned herein are trademarks of their respective holders.

SILICON LABS

Silicon Laboratories Inc.
400 West Cesar Chavez
Austin, TX 78701
USA

http://www.silabs.com