PIC16C72 SERIES

8-Bit CMOS Microcontrollers with A/D Converter

Devices included:

- PIC16C72
- PIC16CR72

Microcontroller Core Features:

- High-performance RISC CPU
- Only 35 single word instructions to learn
- All single cycle instructions except for program branches which are two cycle
- Operating speed: DC - 20 MHz clock input
  DC - 200 ns instruction cycle
- 2K x 14 words of Program Memory, 128 x 8 bytes of Data Memory (RAM)
- Interrupt capability
- Eight level deep hardware stack
- Direct, indirect, and relative addressing modes
- Power-on Reset (POR)
- Power-up Timer (PWRT) and Oscillator Start-up Timer (OST)
- Watchdog Timer (WDT) with its own on-chip RC oscillator for reliable operation
- Programmable code-protection
- Power saving SLEEP mode
- Selectable oscillator options
- Low-power, high-speed CMOS technology
- Fully static design
- Wide operating voltage range:
  - 2.5V to 6.0V (PIC16C72)
  - 2.5V to 5.5V (PIC16CR72)
- High Sink/Source Current 25/25 mA
- Commercial, Industrial and Extended temperature ranges
- Low-power consumption:
  - < 2 mA @ 5V, 4 MHz
  - 15 μA typical @ 3V, 32 kHz
  - < 1 μA typical standby current

Pin Diagrams

SDIP, SOIC, SSOP, Windowed Side Brazed Ceramic

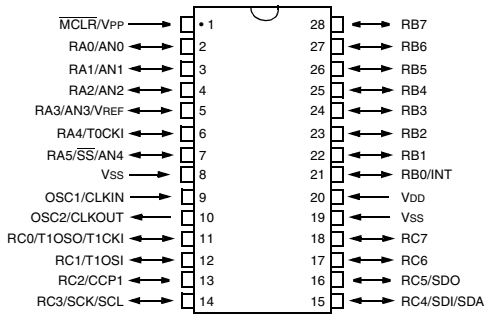

PIC16C72
PIC16CR72

Peripheral Features:

- Timer0: 8-bit timer/counter with 8-bit prescaler
- Timer1: 16-bit timer/counter with prescaler, can be incremented during sleep via external crystal/clock
- Timer2: 8-bit timer/counter with 8-bit period register, prescaler and postscaler
- Capture, Compare, PWM (CCP) module
  - Capture is 16-bit, max. resolution is 12.5 ns
  - Compare is 16-bit, max. resolution is 200 ns
  - PWM max. resolution is 10-bit
- 8-bit 5-channel analog-to-digital converter
- Synchronous Serial Port (SSP) with SPI and I^2C™
- Brown-out detection circuitry for Brown-out Reset (BOR)

© 1998-2013 Microchip Technology Inc.

Table of Contents

1.0 Device Overview ... 3
2.0 Memory Organization ... 5
3.0 I/O Ports ... 19
4.0 Timer0 Module ... 25
5.0 Timer1 Module ... 27
6.0 Timer2 Module ... 31
7.0 Capture/Compare/PWM (CCP) Module ... 33
8.0 Synchronous Serial Port (SSP) Module ... 39
9.0 Analog-to-Digital Converter (A/D) Module ... 53
10.0 Special Features of the CPU ... 59
11.0 Instruction Set Summary ... 73
12.0 Development Support ... 75
13.0 Electrical Characteristics - PIC16C72 Series ... 77
14.0 DC and AC Characteristics Graphs and Tables - PIC16C72 ... 97
15.0 DC and AC Characteristics Graphs and Tables - PIC16CR72 ... 107
16.0 Packaging Information ... 109
Appendix A: What's New in this Data Sheet ... 115
Appendix B: What's Changed in this Data Sheet ... 115
Appendix C: Device Differences ... 115
Index ... 117
On-Line Support ... 121
Reader Response ... 122
PIC16C72 Series Product Identification System ... 125
Sales and Support ... 125

To Our Valued Customers

We constantly strive to improve the quality of all our products and documentation. We have spent an exceptional amount of time to ensure that these documents are correct. However, we realize that we may have missed a few things. If you find any information that is missing or appears in error, please use the reader response form in the back of this data sheet to inform us. We appreciate your assistance in making this a better document.

Key Reference Manual Features	PIC16C72	PIC16CR72
Operating Frequency	DC - 20MHz	DC - 20MHz
Resets	POR, PWRT, OST, BOR	POR, PWRT, OST, BOR
Program Memory - (14-bit words)	2K (EPROM)	2K (ROM)
Data Memory - RAM (8-bit bytes)	128	128
Interrupts	8	8
I/O Ports	PortA, PortB, PortC	PortA, PortB, PortC
Timers	Timer0, Timer1, Timer2	Timer0, Timer1, Timer2
Capture/Compare/PWM Modules	1	1
Serial Communications	Basic SSP	SSP
8-Bit A/D Converter	5 channels	5 channels
Instruction Set (No. of Instructions)	35	35

 © 1998-2013 Microchip Technology Inc.

1.0 DEVICE OVERVIEW

This document contains device-specific information for the operation of the PIC16C72 device. Additional information may be found in the PIC® Mid-Range MCU Reference Manual (DS33023) which may be downloaded from the Microchip website. The Reference Manual should be considered a complementary document to this data sheet, and is highly recommended reading for a better understanding of the device architecture and operation of the peripheral modules.

The PIC16C72 belongs to the Mid-Range family of the PIC devices. A block diagram of the device is shown in Figure 1-1.

The program memory contains 2K words which translate to 2048 instructions, since each 14-bit program memory word is the same width as each device instruction. The data memory (RAM) contains 128 bytes.

There are also 22 I/O pins that are user-configurable on a pin-to-pin basis. Some pins are multiplexed with other device functions. These functions include:

- External interrupt
- Change on PORTB interrupt
- Timer0 clock input
- Timer1 clock/oscillator
- Capture/Compare/PWM
- A/D converter
- SPI/I^2C

Table 1-1 details the pinout of the device with descriptions and details for each pin.

FIGURE 1-1: PIC16C72/CR72 BLOCK DIAGRAM

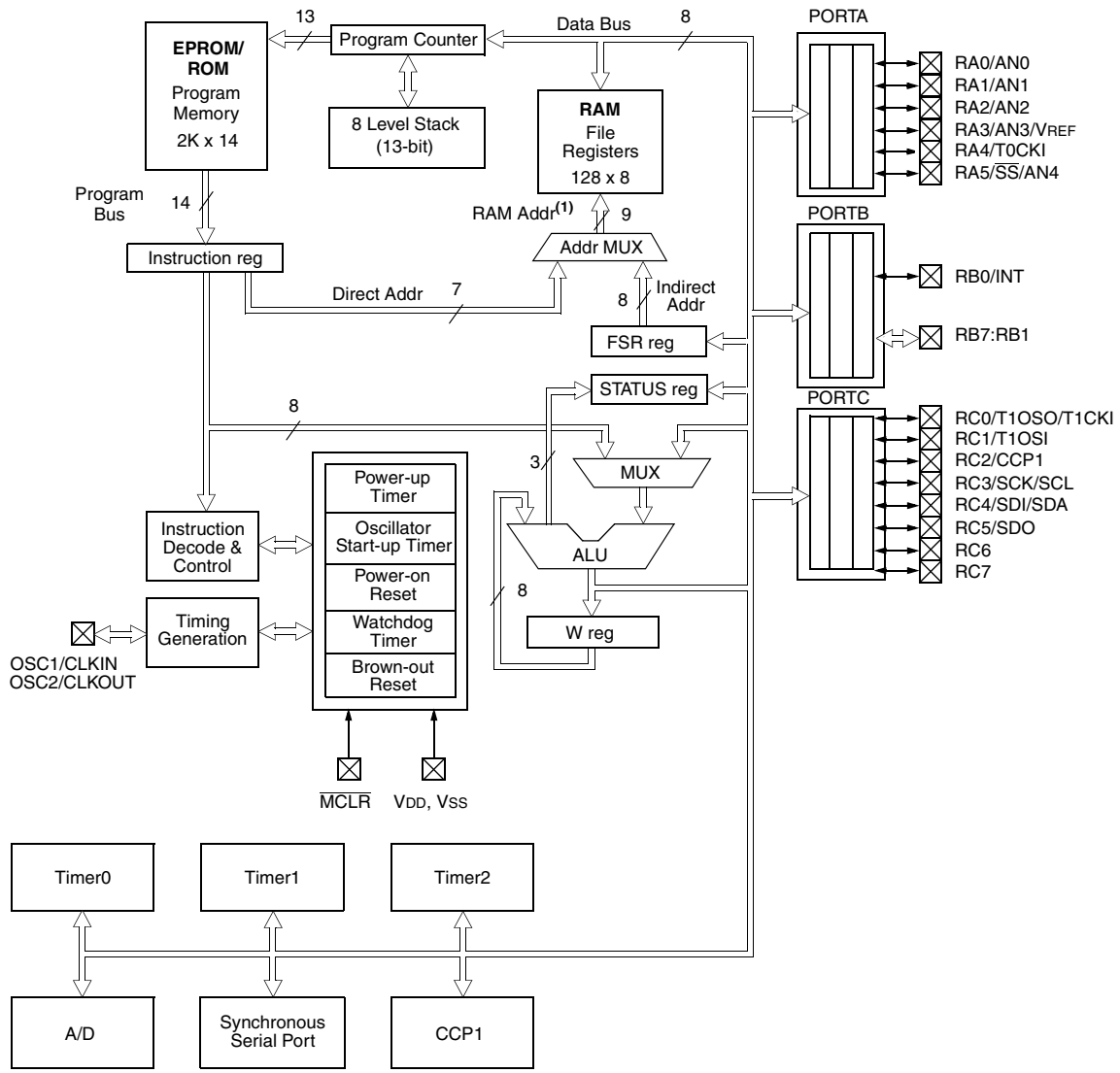

Note 1: Higher order bits are from the STATUS register.

TABLE 1-1 PIC16C72/CR72 PINOUT DESCRIPTION

Pin Name	Pin#	I/O/P Type	Buffer Type	Description
OSC1/CLKIN	9	I	ST/CMOS(3)	Oscillator crystal input/external clock source input.
OSC2/CLKOUT	10	O	—	Oscillator crystal output. Connects to crystal or resonator in crystal oscillator mode. In RC mode, the OSC2 pin outputs CLKOUT which has 1/4 the frequency of OSC1, and denotes the instruction cycle rate.
$\overline{MCLR}$/VPP	1	I/P	ST	Master clear (reset) input or programming voltage input. This pin is an active low reset to the device.
				PORTA is a bi-directional I/O port.
RA0/AN0	2	I/O	TTL	RA0 can also be analog input0.
RA1/AN1	3	I/O	TTL	RA1 can also be analog input1.
RA2/AN2	4	I/O	TTL	RA2 can also be analog input2.
RA3/AN3/VREF	5	I/O	TTL	RA3 can also be analog input3 or analog reference voltage
RA4/T0CKI	6	I/O	ST	RA4 can also be the clock input to the Timer0 module. Output is open drain type.
RA5/$\overline{SS}$/AN4	7	I/O	TTL	RA5 can also be analog input4 or the slave select for the synchronous serial port.
				PORTB is a bi-directional I/O port. PORTB can be software programmed for internal weak pull-up on all inputs.
RB0/INT	21	I/O	TTL/ST(1)	RB0 can also be the external interrupt pin.
RB1	22	I/O	TTL	
RB2	23	I/O	TTL	
RB3	24	I/O	TTL	
RB4	25	I/O	TTL	Interrupt on change pin.
RB5	26	I/O	TTL	Interrupt on change pin.
RB6	27	I/O	TTL/ST(2)	Interrupt on change pin. Serial programming clock.
RB7	28	I/O	TTL/ST(2)	Interrupt on change pin. Serial programming data.
				PORTC is a bi-directional I/O port.
RC0/T1OSO/T1CKI	11	I/O	ST	RC0 can also be the Timer1 oscillator output or Timer1 clock input.
RC1/T1OSI	12	I/O	ST	RC1 can also be the Timer1 oscillator input.
RC2/CCP1	13	I/O	ST	RC2 can also be the Capture1 input/Compare1 output/PWM1 output.
RC3/SCK/SCL	14	I/O	ST	RC3 can also be the synchronous serial clock input/output for both SPI and I^2C modes.
RC4/SDI/SDA	15	I/O	ST	RC4 can also be the SPI Data In (SPI mode) or data I/O (I^2C mode).
RC5/SDO	16	I/O	ST	RC5 can also be the SPI Data Out (SPI mode).
RC6	17	I/O	ST	
RC7	18	I/O	ST	
VSS	8, 19	P	—	Ground reference for logic and I/O pins.
VDD	20	P	—	Positive supply for logic and I/O pins.

Legend: I = input O = output I/O = input/output P = power
— = Not used TTL = TTL input ST = Schmitt Trigger input

Note 1: This buffer is a Schmitt Trigger input when configured as the external interrupt.
2: This buffer is a Schmitt Trigger input when used in serial programming mode.
3: This buffer is a Schmitt Trigger input when configured in RC oscillator mode and a CMOS input otherwise.

 © 1998-2013 Microchip Technology Inc.

2.0 MEMORY ORGANIZATION

There are two memory blocks in PIC16C72 Series devices. These are the program memory and the data memory. Each block has its own bus, so that access to both blocks can occur during the same oscillator cycle.

The data memory can further be broken down into the general purpose RAM and the Special Function Registers (SFRs). The operation of the SFRs that control the “core” are described here. The SFRs used to control the peripheral modules are described in the section discussing each individual peripheral module.

Additional information on device memory may be found in the PIC® Mid-Range Reference Manual, DS33023.

2.1 Program Memory Organization

PIC16C72 Series devices have a 13-bit program counter capable of addressing a 2K x 14 program memory space. The address range for this program memory is 0000h - 07FFh. Accessing a location above the physically implemented address will cause a wraparound.

The reset vector is at 0000h and the interrupt vector is at 0004h.

FIGURE 2-1: PROGRAM MEMORY MAP AND STACK

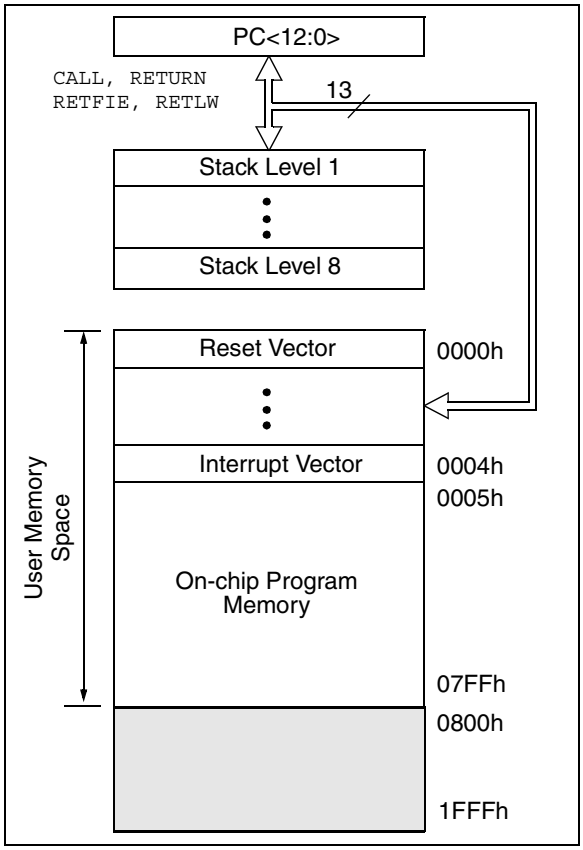

2.2 Data Memory Organization

The data memory is partitioned into multiple banks which contain the General Purpose Registers and the Special Function Registers. Bits RP1 and RP0 are the bank select bits.

RP1*	RP0

(STATUS<6:5>)

= 00 → Bank0
= 01 → Bank1
= 10 → Bank2 (not implemented)
= 11 → Bank3 (not implemented)

*	Maintain this bit clear to ensure upward compatibility with future products.

Each bank extends up to 7Fh (128 bytes). The lower locations of each bank are reserved for the Special Function Registers. Above the Special Function Registers are General Purpose Registers, implemented as static RAM.

All implemented banks contain special function registers. Some “high use” special function registers from one bank may be mirrored in another bank for code reduction and quicker access (ex; the STATUS register is in Bank 0 and Bank 1).

2.2.1 GENERAL PURPOSE REGISTER FILE

The register file can be accessed either directly or indirectly through the File Select Register FSR (Section 2.5).

FIGURE 2-2: REGISTER FILE MAP

File Address	Bank 0	Bank 1	File Address
00h	INDF(1)	INDF(1)	80h
01h	TMR0	OPTION	81h
02h	PCL	PCL	82h
03h	STATUS	STATUS	83h
04h	FSR	FSR	84h
05h	PORTA	TRISA	85h
06h	PORTB	TRISB	86h
07h	PORTC	TRISC	87h
08h			88h
09h			89h
0Ah	PCLATH	PCLATH	8Ah
0Bh	INTCON	INTCON	8Bh
0Ch	PIR1	PIE1	8Ch
0Dh			8Dh
0Eh	TMR1L	PCON	8Eh
0Fh	TMR1H		8Fh
10h	T1CON		90h
11h	TMR2		91h
12h	T2CON	PR2	92h
13h	SSPBUF	SSPADD	93h
14h	SSPCON	SSPSTAT	94h
15h	CCPR1L		95h
16h	CCPR1H		96h
17h	CCP1CON		97h
18h			98h
19h			99h
1Ah			9Ah
1Bh			9Bh
1Ch			9Ch
1Dh			9Dh
1Eh	ADRES		9Eh
1Fh	ADCON0	ADCON1	9Fh
20h	General Purpose Register	General Purpose Register	A0h
			BFh
			C0h
7Fh			FFh

Unimplemented data memory locations, read as '0'.
Note 1: Not a physical register.

 © 1998-2013 Microchip Technology Inc.

2.2.2 SPECIAL FUNCTION REGISTERS

The Special Function Registers are registers used by the CPU and Peripheral Modules for controlling the desired operation of the device. These registers are implemented as static RAM.

The special function registers can be classified into two sets (core and peripheral). Those registers associated with the “core” functions are described in this section, and those related to the operation of the peripheral features are described in the section of that peripheral feature.

TABLE 2-1 SPECIAL FUNCTION REGISTER SUMMARY

Address	Name	Bit 7	Bit 6	Bit 5	Bit 4	Bit 3	Bit 2	Bit 1	Bit 0	Value on: POR, BOR	Value on all other resets (3)
Bank 0											
00h(1)	INDF	Addressing this location uses contents of FSR to address data memory (not a physical register)								0000 0000	0000 0000
01h	TMR0	Timer0 module’s register								xxxx xxxx	uuuu uuuu
02h(1)	PCL	Program Counter's (PC) Least Significant Byte								0000 0000	0000 0000
03h(1)	STATUS	IRP(4)	RP1(4)	RP0	$\overline{TO}$	$\overline{PD}$	Z	DC	C	0001 1xxx	000q quuu
04h(1)	FSR	Indirect data memory address pointer								xxxx xxxx	uuuu uuuu
05h	PORTA	—	—	PORTA Data Latch when written: PORTA pins when read						--0x 0000	--0u 0000
06h	PORTB	PORTB Data Latch when written: PORTB pins when read								xxxx xxxx	uuuu uuuu
07h	PORTC	PORTC Data Latch when written: PORTC pins when read								xxxx xxxx	uuuu uuuu
08h	—	Unimplemented								—	—
09h	—	Unimplemented								—	—
0Ah(1,2)	PCLATH	—	—	—	Write Buffer for the upper 5 bits of the Program Counter					---0 0000	---0 0000
0Bh(1)	INTCON	GIE	PEIE	T0IE	INTE	RBIE	T0IF	INTF	RBIF	0000 000x	0000 000u
0Ch	PIR1	—	ADIF	—	—	SSPIF	CCP1IF	TMR2IF	TMR1IF	-0-- 0000	-0-- 0000
0Dh	—	Unimplemented								—	—
0Eh	TMR1L	Holding register for the Least Significant Byte of the 16-bit TMR1 register								xxxx xxxx	uuuu uuuu
0Fh	TMR1H	Holding register for the Most Significant Byte of the 16-bit TMR1 register								xxxx xxxx	uuuu uuuu
10h	T1CON	—	—	T1CKPS1	T1CKPS0	T1OSCEN	$\overline{T1SYNC}$	TMR1CS	TMR1ON	--00 0000	--uu uuuu
11h	TMR2	Timer2 module’s register								0000 0000	0000 0000
12h	T2CON	—	TOUTPS3	TOUTPS2	TOUTPS1	TOUTPS0	TMR2ON	T2CKPS1	T2CKPS0	-000 0000	-000 0000
13h	SSPBUF	Synchronous Serial Port Receive Buffer/Transmit Register								xxxx xxxx	uuuu uuuu
14h	SSPCON	WCOL	SSPOV	SSPEN	CKP	SSPM3	SSPM2	SSPM1	SSPM0	0000 0000	0000 0000
15h	CCPR1L	Capture/Compare/PWM Register (LSB)								xxxx xxxx	uuuu uuuu
16h	CCPR1H	Capture/Compare/PWM Register (MSB)								xxxx xxxx	uuuu uuuu
17h	CCP1CON	—	—	CCP1X	CCP1Y	CCP1M3	CCP1M2	CCP1M1	CCP1M0	--00 0000	--00 0000
18h-1Dh	—	Unimplemented								—	—
1Eh	ADRES	A/D Result Register								xxxx xxxx	uuuu uuuu
1Fh	ADCON0	ADCS1	ADCS0	CHS2	CHS1	CHS0	GO/$\overline{DONE}$	—	ADON	0000 00-0	0000 00-0

Legend: x = unknown, u = unchanged, q = value depends on condition, - = unimplemented read as '0'.
Shaded locations are unimplemented, read as ‘0’.

Note 1: These registers can be addressed from either bank.
2: The upper byte of the program counter is not directly accessible. PCLATH is a holding register for the PC<12:8> whose contents are transferred to the upper byte of the program counter.
3: Other (non power-up) resets include external reset through $\overline{MCLR}$ and Watchdog Timer Reset.
4: The IRP and RP1 bits are reserved on the PIC16C72/CR72. Always maintain these bits clear.
5: SSPSTAT<7:6> are not implemented on the PIC16C72, read as '0'.

TABLE 2-1 SPECIAL FUNCTION REGISTER SUMMARY (CONTINUED)

Address	Name	Bit 7	Bit 6	Bit 5	Bit 4	Bit 3	Bit 2	Bit 1	Bit 0	Value on: POR, BOR	Value on all other resets (3)
Bank 1											
80h(1)	INDF	Addressing this location uses contents of FSR to address data memory (not a physical register)								0000 0000	0000 0000
81h	OPTION_REG	$\overline{\text{RBPU}}$	INTEDG	T0CS	T0SE	PSA	PS2	PS1	PS0	1111 1111	1111 1111
82h(1)	PCL	Program Counter's (PC) Least Significant Byte								0000 0000	0000 0000
83h(1)	STATUS	IRP(4)	RP1(4)	RP0	$\overline{\text{TO}}$	$\overline{\text{PD}}$	Z	DC	C	0001 1xxx	000q quuu
84h(1)	FSR	Indirect data memory address pointer								xxxx xxxx	uuuu uuuu
85h	TRISA	—	—	PORTA Data Direction Register						--11 1111	--11 1111
86h	TRISB	PORTB Data Direction Register								1111 1111	1111 1111
87h	TRISC	PORTC Data Direction Register								1111 1111	1111 1111
88h	—	Unimplemented								—	—
89h	—	Unimplemented								—	—
8Ah(1,2)	PCLATH	—	—	—	Write Buffer for the upper 5 bits of the PC					---0 0000	---0 0000
8Bh(1)	INTCON	GIE	PEIE	T0IE	INTE	RBIE	T0IF	INTF	RBIF	0000 000x	0000 000u
8Ch	PIE1	—	ADIE	—	—	SSPIE	CCP1IE	TMR2IE	TMR1IE	-0-- 0000	-0-- 0000
8Dh	—	Unimplemented								—	—
8Eh	PCON	—	—	—	—	—	—	$\overline{\text{POR}}$	$\overline{\text{BOR}}$	---- --qq	---- --uu
8Fh	—	Unimplemented								—	—
90h	—	Unimplemented								—	—
91h	—	Unimplemented								—	—
92h	PR2	Timer2 Period Register								1111 1111	1111 1111
93h	SSPADD	Synchronous Serial Port (I^2C mode) Address Register								0000 0000	0000 0000
94h	SSPSTAT	SMP(5)	CKE(5)	D/$\overline{\text{A}}$	P	S	R/$\overline{\text{W}}$	UA	BF	0000 0000	0000 0000
95h	—	Unimplemented								—	—
96h	—	Unimplemented								—	—
97h	—	Unimplemented								—	—
98h	—	Unimplemented								—	—
99h	—	Unimplemented								—	—
9Ah	—	Unimplemented								—	—
9Bh	—	Unimplemented								—	—
9Ch	—	Unimplemented								—	—
9Dh	—	Unimplemented								—	—
9Eh	—	Unimplemented								—	—
9Fh	ADCON1	—	—	—	—	—	PCFG2	PCFG1	PCFG0	---- -000	---- -000

Legend: x = unknown, u = unchanged, q = value depends on condition, - = unimplemented read as '0'.
Shaded locations are unimplemented, read as ‘0’.

Note 1: These registers can be addressed from either bank.
2: The upper byte of the program counter is not directly accessible. PCLATH is a holding register for the PC<12:8> whose contents are transferred to the upper byte of the program counter.
3: Other (non power-up) resets include external reset through $\overline{\text{MCLR}}$ and Watchdog Timer Reset.
4: The IRP and RP1 bits are reserved on the PIC16C72/CR72. Always maintain these bits clear.
5: SSPSTAT<7:6> are not implemented on the PIC16C72, read as '0'.

 © 1998-2013 Microchip Technology Inc.

2.2.2.1 STATUS REGISTER

The STATUS register, shown in Figure 2-3, contains the arithmetic status of the ALU, the RESET status and the bank select bits for data memory.

The STATUS register can be the destination for any instruction, as with any other register. If the STATUS register is the destination for an instruction that affects the Z, DC or C bits, then the write to these three bits is disabled. These bits are set or cleared according to the device logic. Furthermore, the $\overline{TO}$ and $\overline{PD}$ bits are not writable. Therefore, the result of an instruction with the STATUS register as destination may be different than intended.

For example, `CLRF STATUS` will clear the upper-three bits and set the Z bit. This leaves the STATUS register as `000u u1uu` (where `u` = unchanged).

It is recommended, therefore, that only `BCF`, `BSF`, `SWAPF` and `MOVWF` instructions are used to alter the STATUS register because these instructions do not affect the Z, C or DC bits from the STATUS register. For other instructions, not affecting any status bits, see the "Instruction Set Summary."

> **Note 1:** These devices do not use bits IRP and RP1 (STATUS<7:6>). Maintain these bits clear to ensure upward compatibility with future products.
>
> **Note 2:** The C and DC bits operate as a $\overline{\text{borrow}}$ and $\overline{\text{digit borrow}}$ bit, respectively, in subtraction. See the `SUBLW` and `SUBWF` instructions for examples.

FIGURE 2-3: STATUS REGISTER (ADDRESS 03h, 83h)

R/W-0	R/W-0	R/W-0	R-1	R-1	R/W-x	R/W-x	R/W-x
IRP	RP1	RP0	$\overline{TO}$	$\overline{PD}$	Z	DC	C
bit7							bit0

R = Readable bit
W = Writable bit
U = Unimplemented bit, read as '0'
- n = Value at POR reset

bit 7: **IRP**: Register Bank Select bit (used for indirect addressing)
1 = Bank 2, 3 (100h - 1FFh)
0 = Bank 0, 1 (00h - FFh)

bit 6-5: **RP1:RP0**: Register Bank Select bits (used for direct addressing)
`11` = Bank 3 (180h - 1FFh)
`10` = Bank 2 (100h - 17Fh)
`01` = Bank 1 (80h - FFh)
`00` = Bank 0 (00h - 7Fh)
Each bank is 128 bytes. For devices with only Bank0 and Bank1, the IRP bit is reserved. Always maintain this bit clear.

bit 4: **$\overline{TO}$**: Time-out bit
1 = After power-up, `CLRWDT` instruction, or `SLEEP` instruction
0 = A WDT time-out occurred

bit 3: **$\overline{PD}$**: Power-down bit
1 = After power-up or by the `CLRWDT` instruction
0 = By execution of the `SLEEP` instruction

bit 2: **Z**: Zero bit
1 = The result of an arithmetic or logic operation is zero
0 = The result of an arithmetic or logic operation is not zero

bit 1: **DC**: Digit carry/$\overline{\text{borrow}}$ bit (`ADDWF`, `ADDLW`, `SUBLW`, `SUBWF` instructions) (for $\overline{\text{borrow}}$ the polarity is reversed)
1 = A carry-out from the 4th low order bit of the result occurred
0 = No carry-out from the 4th low order bit of the result

bit 0: **C**: Carry/$\overline{\text{borrow}}$ bit (`ADDWF`, `ADDLW`, `SUBLW`, `SUBWF` instructions)
1 = A carry-out from the most significant bit of the result occurred
0 = No carry-out from the most significant bit of the result occurred
Note: For $\overline{\text{borrow}}$ the polarity is reversed. A subtraction is executed by adding the two's complement of the second operand. For rotate (`RRF`, `RLF`) instructions, this bit is loaded with either the high or low order bit of the source register.

2.2.2.2 OPTION_REG REGISTER

The OPTION_REG register is a readable and writable register which contains various control bits to configure the TMR0 prescaler/WDT postscaler (single assignable register known also as the prescaler), the External INT Interrupt, TMR0, and the weak pull-ups on PORTB.

> **Note:** To achieve a 1:1 prescaler assignment for the TMR0 register, assign the prescaler to the Watchdog Timer.

FIGURE 2-4: OPTION_REG REGISTER (ADDRESS 81h)

R/W-1	R/W-1	R/W-1	R/W-1	R/W-1	R/W-1	R/W-1	R/W-1
$\overline{\text{RBPU}}$	INTEDG	T0CS	T0SE	PSA	PS2	PS1	PS0
bit7							bit0

R = Readable bit
W = Writable bit
U = Unimplemented bit, read as ‘0’
- n = Value at POR reset

bit 7: **$\overline{\text{RBPU}}$**: PORTB Pull-up Enable bit
1 = PORTB pull-ups are disabled
0 = PORTB pull-ups are enabled by individual port latch values

bit 6: **INTEDG**: Interrupt Edge Select bit
1 = Interrupt on rising edge of RB0/INT pin
0 = Interrupt on falling edge of RB0/INT pin

bit 5: **T0CS**: TMR0 Clock Source Select bit
1 = Transition on RA4/T0CKI pin
0 = Internal instruction cycle clock (CLKOUT)

bit 4: **T0SE**: TMR0 Source Edge Select bit
1 = Increment on high-to-low transition on RA4/T0CKI pin
0 = Increment on low-to-high transition on RA4/T0CKI pin

bit 3: **PSA**: Prescaler Assignment bit
1 = Prescaler is assigned to the WDT
0 = Prescaler is assigned to the Timer0 module

bit 2-0: **PS2:PS0**: Prescaler Rate Select bits

Bit Value	TMR0 Rate	WDT Rate
000	1 : 2	1 : 1
001	1 : 4	1 : 2
010	1 : 8	1 : 4
011	1 : 16	1 : 8
100	1 : 32	1 : 16
101	1 : 64	1 : 32
110	1 : 128	1 : 64
111	1 : 256	1 : 128

 © 1998-2013 Microchip Technology Inc.

2.2.2.3 INTCON REGISTER

The INTCON Register is a readable and writable register which contains various enable and flag bits for the TMR0 register overflow, RB Port change and External RB0/INT pin interrupts.

Note: Interrupt flag bits get set when an interrupt condition occurs regardless of the state of its corresponding enable bit or the global enable bit, GIE (INTCON<7>). User software should ensure the appropriate interrupt flag bits are clear prior to enabling an interrupt.

FIGURE 2-5: INTCON REGISTER (ADDRESS 0Bh, 8Bh)

R/W-0	R/W-0	R/W-0	R/W-0	R/W-0	R/W-0	R/W-0	R/W-x
GIE	PEIE	T0IE	INTE	RBIE	T0IF	INTF	RBIF
bit7							bit0

R = Readable bit
W = Writable bit
U = Unimplemented bit, read as '0'
- n = Value at POR reset

bit 7: **GIE:** Global Interrupt Enable bit
1 = Enables all un-masked interrupts
0 = Disables all interrupts

bit 6: **PEIE**: Peripheral Interrupt Enable bit
1 = Enables all un-masked peripheral interrupts
0 = Disables all peripheral interrupts

bit 5: **T0IE**: TMR0 Overflow Interrupt Enable bit
1 = Enables the TMR0 interrupt
0 = Disables the TMR0 interrupt

bit 4: **INTE**: RB0/INT External Interrupt Enable bit
1 = Enables the RB0/INT external interrupt
0 = Disables the RB0/INT external interrupt

bit 3: **RBIE**: RB Port Change Interrupt Enable bit
1 = Enables the RB port change interrupt
0 = Disables the RB port change interrupt

bit 2: **T0IF**: TMR0 Overflow Interrupt Flag bit
1 = TMR0 register has overflowed (must be cleared in software)
0 = TMR0 register did not overflow

bit 1: **INTF**: RB0/INT External Interrupt Flag bit
1 = The RB0/INT external interrupt occurred (must be cleared in software)
0 = The RB0/INT external interrupt did not occur

bit 0: **RBIF**: RB Port Change Interrupt Flag bit
1 = At least one of the RB7:RB4 pins changed state (must be cleared in software)
0 = None of the RB7:RB4 pins have changed state

2.2.2.4 PIE1 REGISTER

This register contains the individual enable bits for the peripheral interrupts.

Note: Bit PEIE (INTCON<6>) must be set to enable any peripheral interrupt.

FIGURE 2-6: PIE1 REGISTER (ADDRESS 8Ch)

U-0	R/W-0	U-0	U-0	R/W-0	R/W-0	R/W-0	R/W-0
—	ADIE	—	—	SSPIE	CCP1IE	TMR2IE	TMR1IE
bit7							bit0

R = Readable bit
W = Writable bit
U = Unimplemented bit, read as '0'
- n = Value at POR reset

bit 7: **Unimplemented:** Read as '0'

bit 6: **ADIE**: A/D Converter Interrupt Enable bit
1 = Enables the A/D interrupt
0 = Disables the A/D interrupt

bit 5-4: **Unimplemented**: Read as '0'

bit 3: **SSPIE**: Synchronous Serial Port Interrupt Enable bit
1 = Enables the SSP interrupt
0 = Disables the SSP interrupt

bit 2: **CCP1IE**: CCP1 Interrupt Enable bit
1 = Enables the CCP1 interrupt
0 = Disables the CCP1 interrupt

bit 1: **TMR2IE**: TMR2 to PR2 Match Interrupt Enable bit
1 = Enables the TMR2 to PR2 match interrupt
0 = Disables the TMR2 to PR2 match interrupt

bit 0: **TMR1IE**: TMR1 Overflow Interrupt Enable bit
1 = Enables the TMR1 overflow interrupt
0 = Disables the TMR1 overflow interrupt

 © 1998-2013 Microchip Technology Inc.

2.2.2.5 PIR1 REGISTER

This register contains the individual flag bits for the Peripheral interrupts.

> **Note:** Interrupt flag bits get set when an interrupt condition occurs regardless of the state of its corresponding enable bit or the global enable bit, GIE (INTCON<7>). User software should ensure the appropriate interrupt flag bits are clear prior to enabling an interrupt.

FIGURE 2-7: PIR1 REGISTER (ADDRESS 0Ch)

U-0	R/W-0	U-0	U-0	R/W-0	R/W-0	R/W-0	R/W-0
—	ADIF	—	—	SSPIF	CCP1IF	TMR2IF	TMR1IF
bit7							bit0

R = Readable bit
W = Writable bit
U = Unimplemented bit, read as '0'
- n = Value at POR reset

bit 7: **Unimplemented:** Read as '0'

bit 6: **ADIF**: A/D Converter Interrupt Flag bit
1 = An A/D conversion completed (must be cleared in software)
0 = The A/D conversion is not complete

bit 5-4: **Unimplemented**: Read as '0'

bit 3: **SSPIF**: Synchronous Serial Port Interrupt Flag bit
1 = The transmission/reception is complete (must be cleared in software)
0 = Waiting to transmit/receive

bit 2: **CCP1IF**: CCP1 Interrupt Flag bit
Capture Mode
1 = A TMR1 register capture occurred (must be cleared in software)
0 = No TMR1 register capture occurred
Compare Mode
1 = A TMR1 register compare match occurred (must be cleared in software)
0 = No TMR1 register compare match occurred
PWM Mode
Unused in this mode

bit 1: **TMR2IF**: TMR2 to PR2 Match Interrupt Flag bit
1 = TMR2 to PR2 match occurred (must be cleared in software)
0 = No TMR2 to PR2 match occurred

bit 0: **TMR1IF**: TMR1 Overflow Interrupt Flag bit
1 = TMR1 register overflowed (must be cleared in software)
0 = TMR1 register did not overflow

2.2.2.6 PCON REGISTER

The Power Control (PCON) register contains a flag bit to allow differentiation between a Power-on Reset (POR) to an external $\overline{\text{MCLR}}$ Reset or WDT Reset. Those devices with brown-out detection circuitry contain an additional bit to differentiate a Brown-out Reset condition from a Power-on Reset condition.

> **Note:** $\overline{\text{BOR}}$ is unknown on Power-on Reset. It must then be set by the user and checked on subsequent resets to see if $\overline{\text{BOR}}$ is clear, indicating a brown-out has occurred. The $\overline{\text{BOR}}$ status bit is a don't care and is not necessarily predictable if the brown-out circuit is disabled (by clearing the BODEN bit in the Configuration word).

FIGURE 2-8: PCON REGISTER (ADDRESS 8Eh)

U-0	U-0	U-0	U-0	U-0	U-0	R/W-0	R/W-q
—	—	—	—	—	—	$\overline{\text{POR}}$	$\overline{\text{BOR}}$
bit7							bit0

R = Readable bit
W = Writable bit
U = Unimplemented bit, read as ‘0’
- n = Value at POR reset

bit 7-2: **Unimplemented:** Read as '0'

bit 1: **$\overline{\text{POR}}$**: Power-on Reset Status bit
1 = No Power-on Reset occurred
0 = A Power-on Reset occurred (must be set in software after a Power-on Reset occurs)

bit 0: **$\overline{\text{BOR}}$**: Brown-out Reset Status bit
1 = No Brown-out Reset occurred
0 = A Brown-out Reset occurred (must be set in software after a Brown-out Reset occurs)

 © 1998-2013 Microchip Technology Inc.

2.3 PCL and PCLATH

The program counter (PC) specifies the address of the instruction to fetch for execution. The PC is 13 bits wide. The low byte is called the PCL register. This register is readable and writable. The high byte is called the PCH register. This register contains the PC<12:8> bits and is not directly readable or writable. All updates to the PCH register go through the PCLATH register.

Figure 2-9 shows the four situations for the loading of the PC. Example 1 shows how the PC is loaded on a write to PCL (PCLATH<4:0> → PCH). Example 2 shows how the PC is loaded during a `GOTO` instruction (PCLATH<4:3> → PCH). Example 3 shows how the PC is loaded during a `CALL` instruction (PCLATH<4:3> → PCH), with the PC loaded (PUSHed) onto the Top of Stack. Finally, example 4 shows how the PC is loaded during one of the return instructions where the PC is loaded (POPed) from the Top of Stack.

FIGURE 2-9: LOADING OF PC IN DIFFERENT SITUATIONS

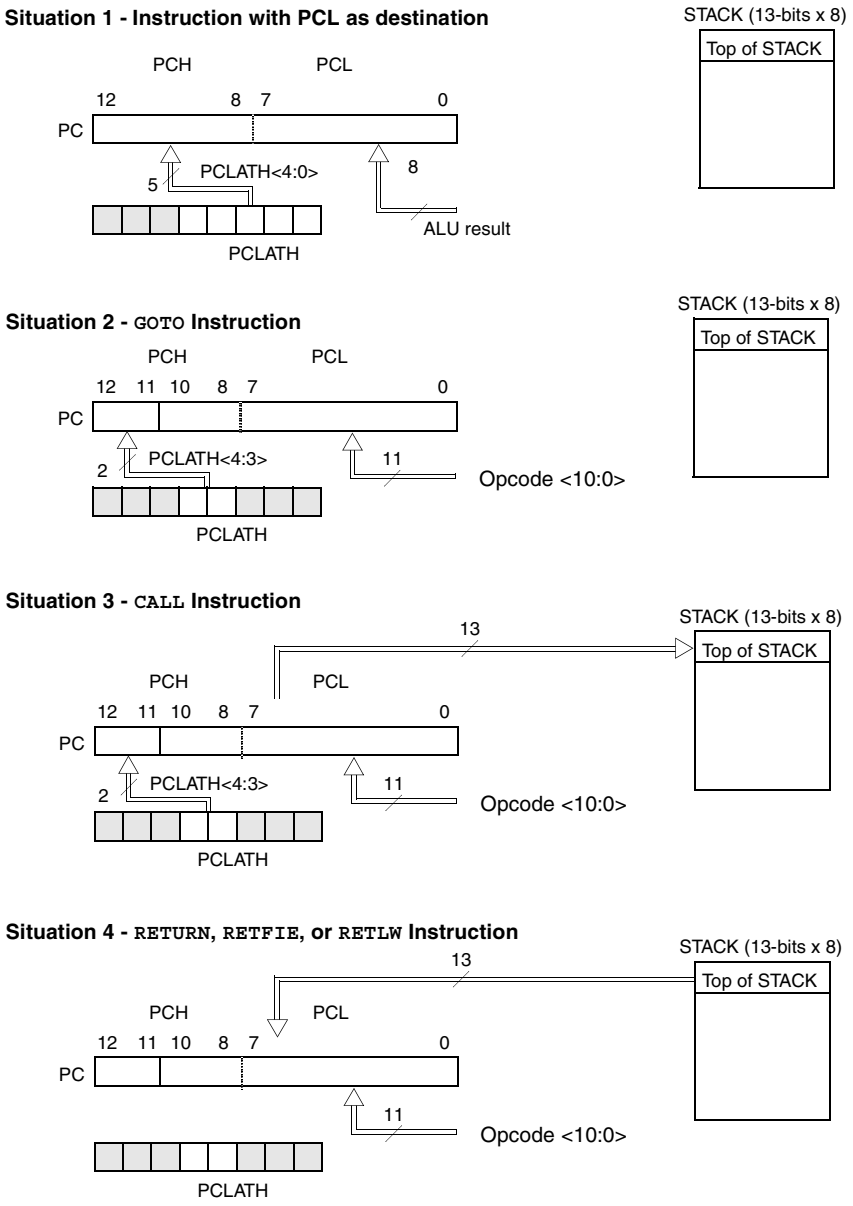

Note: PCLATH is not updated with the contents of PCH.

2.3.1 STACK

The stack allows a combination of up to 8 program calls and interrupts to occur. The stack contains the return address from this branch in program execution.

Midrange devices have an 8 level deep x 13-bit wide hardware stack. The stack space is not part of either program or data space and the stack pointer is not readable or writable. The PC is PUSHed onto the stack when a `CALL` instruction is executed or an interrupt causes a branch. The stack is POPed in the event of a `RETURN`, `RETLW` or a `RETFIE` instruction execution. PCLATH is not modified when the stack is PUSHed or POPed.

After the stack has been PUSHed eight times, the ninth push overwrites the value that was stored from the first push. The tenth push overwrites the second push (and so on). An example of the overwriting of the stack is shown in Figure 2-10.

FIGURE 2-10: STACK MODIFICATION

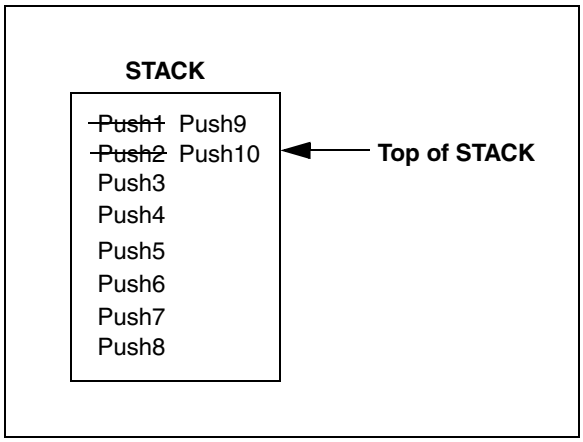

2.4 Program Memory Paging

The `CALL` and `GOTO` instructions provide 11 bits of address to allow branching within any 2K program memory page. When doing a `CALL` or `GOTO` instruction the upper 2 bits of the address are provided by PCLATH<4:3>. When doing a `CALL` or `GOTO` instruction, the user must ensure that the page select bits are programmed so that the desired program memory page is addressed. If a return from a `CALL` instruction (or interrupt) is executed, the entire 13-bit PC is pushed onto the stack. Therefore, manipulation of the PCLATH<4:3> bits are not required for the return instructions (which POPs the address from the stack).

Note:	PIC16C72 Series devices ignore paging bit PCLATH<4>. The use of PCLATH<4> as a general purpose read/write bit is not recommended since this may affect upward compatibility with future products.

 © 1998-2013 Microchip Technology Inc.

2.5 Indirect Addressing, INDF and FSR Registers

The INDF register is not a physical register. Addressing INDF actually addresses the register whose address is contained in the FSR register (FSR is a *pointer*). This is indirect addressing.

EXAMPLE 2-1: INDIRECT ADDRESSING

- Register file 05 contains the value 10h
- Register file 06 contains the value 0Ah
- Load the value 05 into the FSR register
- A read of the INDF register will return the value of 10h
- Increment the value of the FSR register by one (FSR = 06)
- A read of the INDR register now will return the value of 0Ah.

Reading INDF itself indirectly (FSR = 0) will produce 00h. Writing to the INDF register indirectly results in a no-operation (although STATUS bits may be affected).

A simple program to clear RAM locations 20h-2Fh using indirect addressing is shown in Example 2-2.

EXAMPLE 2-2: HOW TO CLEAR RAM USING INDIRECT ADDRESSING

```
        movlw   0x20   ;initialize pointer
        movwf   FSR    ;  to RAM
NEXT    clrf    INDF   ;clear INDF register
        incf    FSR    ;inc pointer
        btfss   FSR,4  ;all done?
        goto    NEXT   ;NO, clear next
CONTINUE
        :              ;YES, continue
```

FIGURE 2-11: DIRECT/INDIRECT ADDRESSING

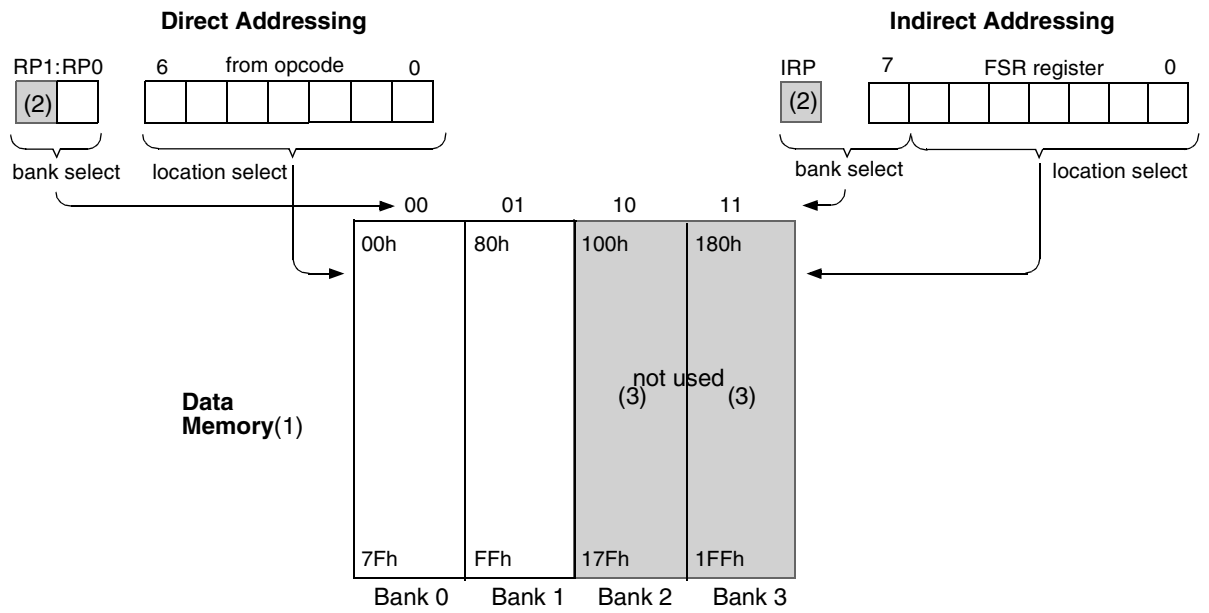

Note 1: For register file map detail see Figure 2-2.

2: Maintain RP1 and IRP as clear for upward compatibility with future products.

3: Not implemented.

NOTES:

 © 1998-2013 Microchip Technology Inc.

3.0 I/O PORTS

Some pins for these I/O ports are multiplexed with an alternate function for the peripheral features on the device. In general, when a peripheral is enabled, that pin may not be used as a general purpose I/O pin.

Additional information on I/O ports may be found in the PIC® Mid-Range MCU Reference Manual, DS33023.

3.1 PORTA and the TRISA Register

PORTA is a 6-bit wide bi-directional port. The corresponding data direction register is TRISA. Setting a TRISA bit (=1) will make the corresponding PORTA pin an input, i.e., put the corresponding output driver in a hi-impedance mode. Clearing a TRISA bit (=0) will make the corresponding PORTA pin an output, i.e., put the contents of the output latch on the selected pin.

Reading the PORTA register reads the status of the pins whereas writing to it will write to the port latch. All write operations are read-modify-write operations. Therefore a write to a port implies that the port pins are read, this value is modified, and then written to the port data latch.

Pin RA4 is multiplexed with the Timer0 module clock input to become the RA4/T0CKI pin. The RA4/T0CKI pin is a Schmitt Trigger input and an open drain output. All other RA port pins have TTL input levels and full CMOS output drivers.

Other PORTA pins are multiplexed with analog inputs and analog VREF input. The operation of each pin is selected by clearing/setting the control bits in the ADCON1 register (A/D Control Register1).

Note:	On a Power-on Reset, these pins are configured as analog inputs and read as '0'.

The TRISA register controls the direction of the RA pins, even when they are being used as analog inputs. The user must ensure the bits in the TRISA register are maintained set when using them as analog inputs.

EXAMPLE 3-1: INITIALIZING PORTA

```
BCF     STATUS, RP0   ;
CLRF    PORTA         ; Initialize PORTA by
                      ; clearing output
                      ; data latches
BSF     STATUS, RP0   ; Select Bank 1
MOVLW   0xCF          ; Value used to
                      ; initialize data
                      ; direction
MOVWF   TRISA         ; Set RA<3:0> as inputs
                      ; RA<5:4> as outputs
                      ; TRISA<7:6> are always
                      ; read as '0'.
```

FIGURE 3-1: BLOCK DIAGRAM OF RA3:RA0 AND RA5 PINS

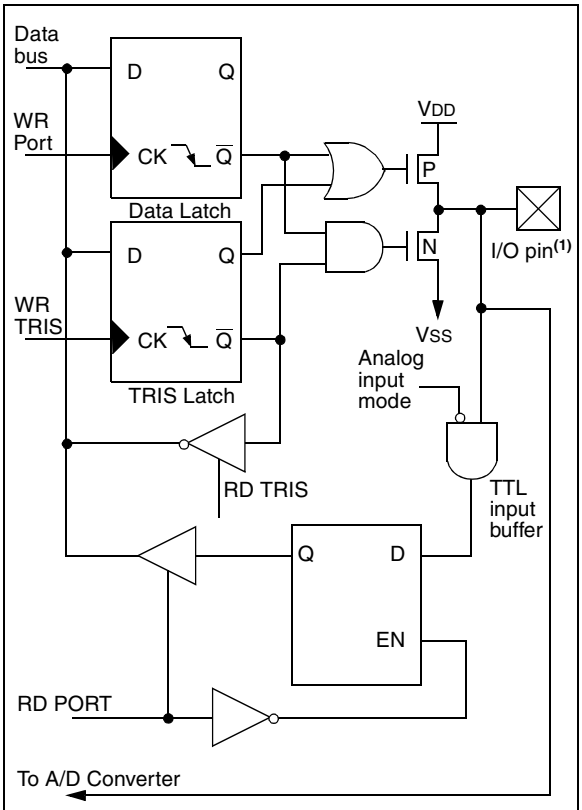

Note 1: I/O pins have protection diodes to VDD and VSS.

FIGURE 3-2: BLOCK DIAGRAM OF RA4/T0CKI PIN

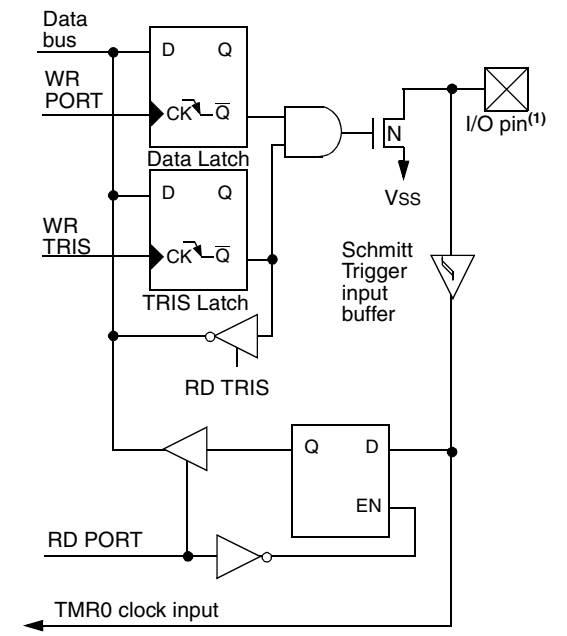

Note 1: I/O pin has protection diodes to VSS only.

TABLE 3-1 PORTA FUNCTIONS

Name	Bit#	Buffer	Function
RA0/AN0	bit0	TTL	Input/output or analog input
RA1/AN1	bit1	TTL	Input/output or analog input
RA2/AN2	bit2	TTL	Input/output or analog input
RA3/AN3/VREF	bit3	TTL	Input/output or analog input or VREF
RA4/T0CKI	bit4	ST	Input/output or external clock input for Timer0 Output is open drain type
RA5/$\overline{SS}$/AN4	bit5	TTL	Input/output or slave select input for synchronous serial port or analog input

Legend: TTL = TTL input, ST = Schmitt Trigger input

TABLE 3-2 SUMMARY OF REGISTERS ASSOCIATED WITH PORTA

Address	Name	Bit 7	Bit 6	Bit 5	Bit 4	Bit 3	Bit 2	Bit 1	Bit 0	Value on: POR, BOR	Value on all other resets
05h	PORTA	—	—	RA5	RA4	RA3	RA2	RA1	RA0	--0x 0000	--0u 0000
85h	TRISA	—	—	PORTA Data Direction Register						--11 1111	--11 1111
9Fh	ADCON1	—	—	—	—	—	PCFG2	PCFG1	PCFG0	---- -000	---- -000

Legend: x = unknown, u = unchanged, - = unimplemented locations read as '0'. Shaded cells are not used by PORTA.

 © 1998-2013 Microchip Technology Inc.

3.2 PORTB and the TRISB Register

PORTB is an 8-bit wide bi-directional port. The corresponding data direction register is TRISB. Setting a TRISB bit (=1) will make the corresponding PORTB pin an input, i.e., put the corresponding output driver in a hi-impedance mode. Clearing a TRISB bit (=0) will make the corresponding PORTB pin an output, i.e., put the contents of the output latch on the selected pin.

EXAMPLE 3-1: INITIALIZING PORTB

```
BCF     STATUS, RP0  ;
CLRF    PORTB        ; Initialize PORTB by
                     ; clearing output
                     ; data latches
BSF     STATUS, RP0  ; Select Bank 1
MOVLW   0xCF         ; Value used to
                     ; initialize data
                     ; direction
MOVWF   TRISB        ; Set RB<3:0> as inputs
                     ; RB<5:4> as outputs
                     ; RB<7:6> as inputs
```

Each of the PORTB pins has a weak internal pull-up. A single control bit can turn on all the pull-ups. This is performed by clearing bit $\overline{\text{RBPU}}$ (OPTION<7>). The weak pull-up is automatically turned off when the port pin is configured as an output. The pull-ups are disabled on a Power-on Reset.

FIGURE 3-3: BLOCK DIAGRAM OF RB3:RB0 PINS

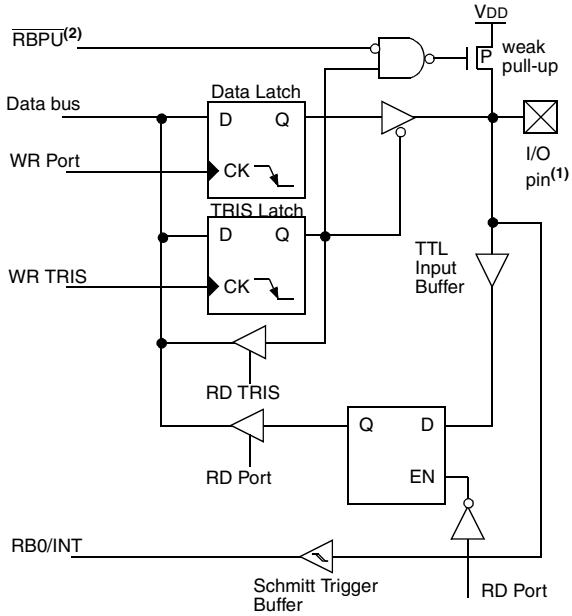

Note 1: I/O pins have diode protection to VDD and VSS.
2: To enable weak pull-ups, set the appropriate TRIS bit(s) and clear the $\overline{\text{RBPU}}$ bit (OPTION<7>).

Four of PORTB's pins, RB7:RB4, have an interrupt on change feature. Only pins configured as inputs can cause this interrupt to occur (i.e. any RB7:RB4 pin configured as an output is excluded from the interrupt on change comparison). The input pins (of RB7:RB4) are compared with the old value latched on the last read of PORTB. The "mismatch" outputs of RB7:RB4 are OR'ed together to generate the RB Port Change Interrupt with flag bit RBIF (INTCON<0>).

This interrupt can wake the device from SLEEP. The user, in the interrupt service routine, can clear the interrupt in the following manner:

a) Any read or write of PORTB. This will end the mismatch condition.
b) Clear flag bit RBIF.

A mismatch condition will continue to set flag bit RBIF. Reading PORTB will end the mismatch condition, and allow flag bit RBIF to be cleared.

The interrupt on change feature is recommended for wake-up on key depression operation and operations where PORTB is only used for the interrupt on change feature. Polling of PORTB is not recommended while using the interrupt on change feature.

FIGURE 3-4: BLOCK DIAGRAM OF RB7:RB4 PINS

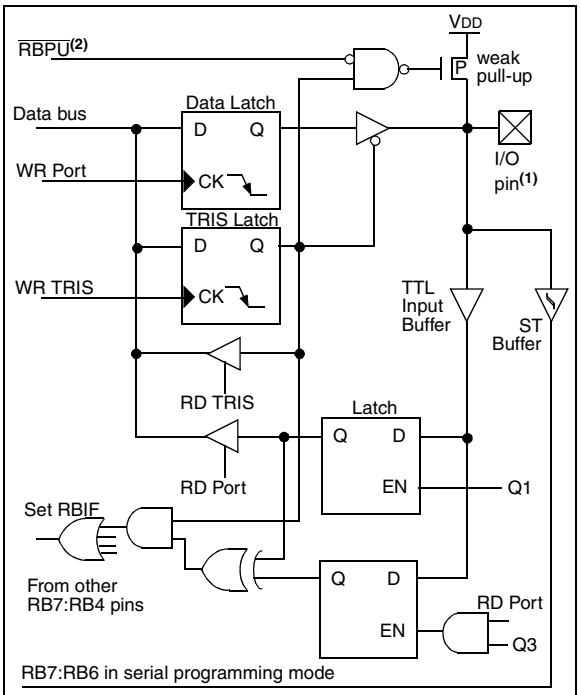

Note 1: I/O pins have diode protection to VDD and VSS.
2: To enable weak pull-ups, set the appropriate TRIS bit(s) and clear the $\overline{\text{RBPU}}$ bit (OPTION<7>).

TABLE 3-3 PORTB FUNCTIONS

Name	Bit#	Buffer	Function
RB0/INT	bit0	TTL/ST(1)	Input/output pin or external interrupt input. Internal software programmable weak pull-up.
RB1	bit1	TTL	Input/output pin. Internal software programmable weak pull-up.
RB2	bit2	TTL	Input/output pin. Internal software programmable weak pull-up.
RB3	bit3	TTL	Input/output pin. Internal software programmable weak pull-up.
RB4	bit4	TTL	Input/output pin (with interrupt on change). Internal software programmable weak pull-up.
RB5	bit5	TTL	Input/output pin (with interrupt on change). Internal software programmable weak pull-up.
RB6	bit6	TTL/ST(2)	Input/output pin (with interrupt on change). Internal software programmable weak pull-up. Serial programming clock.
RB7	bit7	TTL/ST(2)	Input/output pin (with interrupt on change). Internal software programmable weak pull-up. Serial programming data.

Legend: TTL = TTL input, ST = Schmitt Trigger input
Note 1: This buffer is a Schmitt Trigger input when configured as the external interrupt.
2: This buffer is a Schmitt Trigger input when used in serial programming mode.

TABLE 3-4 SUMMARY OF REGISTERS ASSOCIATED WITH PORTB

Address	Name	Bit 7	Bit 6	Bit 5	Bit 4	Bit 3	Bit 2	Bit 1	Bit 0	Value on: POR, BOR	Value on all other resets
06h, 106h	PORTB	RB7	RB6	RB5	RB4	RB3	RB2	RB1	RB0	xxxx xxxx	uuuu uuuu
86h, 186h	TRISB	PORTB Data Direction Register								1111 1111	1111 1111
81h, 181h	OPTION	$\overline{\text{RBPU}}$	INTEDG	T0CS	T0SE	PSA	PS2	PS1	PS0	1111 1111	1111 1111

Legend: x = unknown, u = unchanged. Shaded cells are not used by PORTB.

 © 1998-2013 Microchip Technology Inc.

3.3 PORTC and the TRISC Register

PORTC is an 8-bit wide bi-directional port. The corresponding data direction register is TRISC. Setting a TRISC bit (=1) will make the corresponding PORTC pin an input, i.e., put the corresponding output driver in a hi-impedance mode. Clearing a TRISC bit (=0) will make the corresponding PORTC pin an output, i.e., put the contents of the output latch on the selected pin.

PORTC is multiplexed with several peripheral functions (Table 3-5). PORTC pins have Schmitt Trigger input buffers.

When enabling peripheral functions, care should be taken in defining TRIS bits for each PORTC pin. Some peripherals override the TRIS bit to make a pin an output, while other peripherals override the TRIS bit to make a pin an input. Since the TRIS bit override is in effect while the peripheral is enabled, read-modify-write instructions (`BSF, BCF, XORWF`) with TRISC as destination should be avoided. The user should refer to the corresponding peripheral section for the correct TRIS bit settings.

EXAMPLE 3-1: INITIALIZING PORTC

```
BCF     STATUS, RP0   ; Select Bank 0
CLRF    PORTC         ; Initialize PORTC by
                      ; clearing output
                      ; data latches
BSF     STATUS, RP0   ; Select Bank 1
MOVLW   0xCF          ; Value used to
                      ; initialize data
                      ; direction
MOVWF   TRISC         ; Set RC<3:0> as inputs
                      ; RC<5:4> as outputs
                      ; RC<7:6> as inputs
```

FIGURE 3-5: PORTC BLOCK DIAGRAM (PERIPHERAL OUTPUT OVERRIDE)

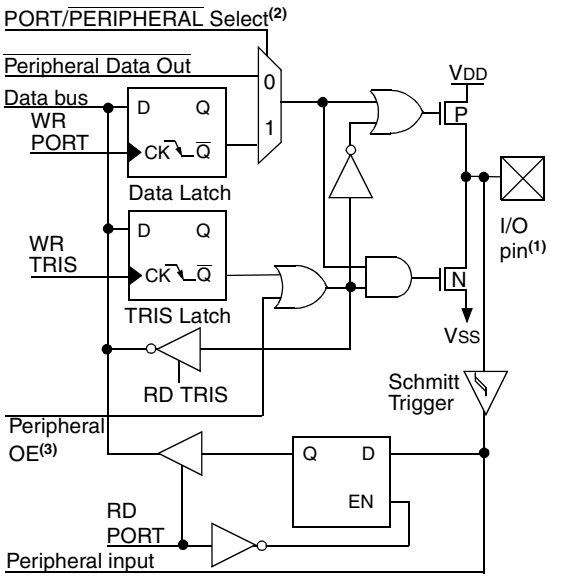

Note 1: I/O pins have diode protection to VDD and VSS.
2: Port/Peripheral select signal selects between port data and peripheral output.
3: Peripheral OE (output enable) is only activated if peripheral select is active.

TABLE 3-5 PORTC FUNCTIONS

Name	Bit#	Buffer Type	Function
RC0/T1OSO/T1CKI	bit0	ST	Input/output port pin or Timer1 oscillator output/Timer1 clock input
RC1/T1OSI	bit1	ST	Input/output port pin or Timer1 oscillator input
RC2/CCP1	bit2	ST	Input/output port pin or Capture1 input/Compare1 output/PWM1 output
RC3/SCK/SCL	bit3	ST	RC3 can also be the synchronous serial clock for both SPI and I^2C modes.
RC4/SDI/SDA	bit4	ST	RC4 can also be the SPI Data In (SPI mode) or data I/O (I^2C mode).
RC5/SDO	bit5	ST	Input/output port pin or Synchronous Serial Port data output
RC6	bit6	ST	Input/output port pin
RC7	bit7	ST	Input/output port pin

Legend: ST = Schmitt Trigger input

TABLE 3-6 SUMMARY OF REGISTERS ASSOCIATED WITH PORTC

Address	Name	Bit 7	Bit 6	Bit 5	Bit 4	Bit 3	Bit 2	Bit 1	Bit 0	Value on: POR, BOR	Value on all other resets
07h	PORTC	RC7	RC6	RC5	RC4	RC3	RC2	RC1	RC0	xxxx xxxx	uuuu uuuu
87h	TRISC	PORTC Data Direction Register								1111 1111	1111 1111

Legend: x = unknown, u = unchanged.

 © 1998-2013 Microchip Technology Inc.

4.0 TIMER0 MODULE

The Timer0 module timer/counter has the following features:

- 8-bit timer/counter
- Readable and writable
- Internal or external clock select
- Edge select for external clock
- 8-bit software programmable prescaler
- Interrupt on overflow from FFh to 00h

Figure 4-1 is a simplified block diagram of the Timer0 module.

Additional information on timer modules is available in the PIC® Mid-Range MCU Reference Manual, DS33023.

4.1 Timer0 Operation

Timer0 can operate as a timer or as a counter.

Timer mode is selected by clearing bit T0CS (OPTION_REG<5>). In timer mode, the Timer0 module will increment every instruction cycle (without prescaler). If the TMR0 register is written, the increment is inhibited for the following two instruction cycles. The user can work around this by writing an adjusted value to the TMR0 register.

Counter mode is selected by setting bit T0CS (OPTION_REG<5>). In counter mode, Timer0 will increment either on every rising or falling edge of pin RA4/T0CKI. The incrementing edge is determined by the Timer0 Source Edge Select bit T0SE (OPTION_REG<4>). Clearing bit T0SE selects the rising edge. Restrictions on the external clock input are discussed in below.

When an external clock input is used for Timer0, it must meet certain requirements. The requirements ensure the external clock can be synchronized with the internal phase clock (TOSC). Also, there is a delay in the actual incrementing of Timer0 after synchronization.

Additional information on external clock requirements is available in the PIC® Mid-Range MCU Reference Manual, DS33023.

4.2 Prescaler

An 8-bit counter is available as a prescaler for the Timer0 module, or as a postscaler for the Watchdog Timer, respectively (Figure 4-2). For simplicity, this counter is being referred to as “prescaler” throughout this data sheet. Note that there is only one prescaler available which is mutually exclusively shared between the Timer0 module and the Watchdog Timer. Thus, a prescaler assignment for the Timer0 module means that there is no prescaler for the Watchdog Timer, and vice-versa.

The prescaler is not readable or writable.

The PSA and PS2:PS0 bits (OPTION_REG<3:0>) determine the prescaler assignment and prescale ratio.

Clearing bit PSA will assign the prescaler to the Timer0 module. When the prescaler is assigned to the Timer0 module, prescale values of 1:2, 1:4, ..., 1:256 are selectable.

Setting bit PSA will assign the prescaler to the Watchdog Timer (WDT). When the prescaler is assigned to the WDT, prescale values of 1:1, 1:2, ..., 1:128 are selectable.

When assigned to the Timer0 module, all instructions writing to the TMR0 register (e.g. `CLRF 1, MOVWF 1, BSF 1,x`....etc.) will clear the prescaler. When assigned to WDT, a `CLRWDT` instruction will clear the prescaler along with the WDT.

Note:	Writing to TMR0 when the prescaler is assigned to Timer0 will clear the prescaler count, but will not change the prescaler assignment.

FIGURE 4-1: TIMER0 BLOCK DIAGRAM

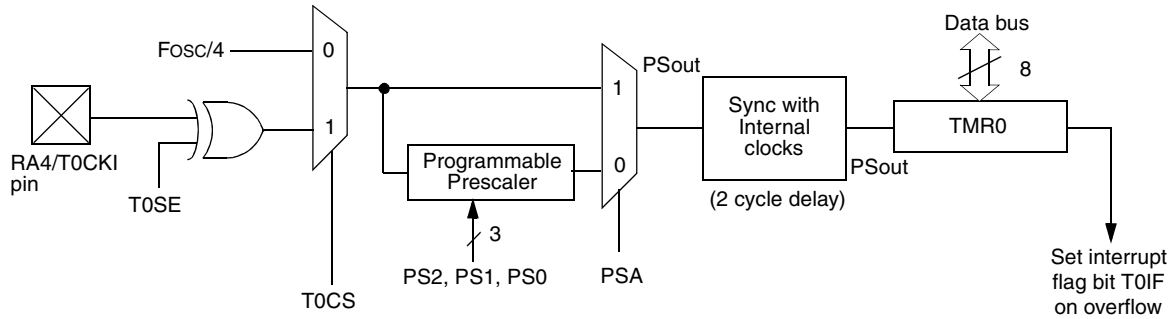

Note 1: T0CS, T0SE, PSA, PS2:PS0 (OPTION_REG<5:0>).
2: The prescaler is shared with Watchdog Timer (refer to Figure 4-2 for detailed block diagram).

4.2.1 SWITCHING PRESCALER ASSIGNMENT

The prescaler assignment is fully under software control, i.e., it can be changed “on the fly” during program execution.

> **Note:** To avoid an unintended device RESET, a specific instruction sequence (shown in the PIC® Mid-Range MCU Reference Manual, DS3023) must be executed when changing the prescaler assignment from Timer0 to the WDT. This sequence must be followed even if the WDT is disabled.

4.3 Timer0 Interrupt

The TMR0 interrupt is generated when the TMR0 register overflows from FFh to 00h. This overflow sets bit T0IF (INTCON<2>). The interrupt can be masked by clearing bit T0IE (INTCON<5>). Bit T0IF must be cleared in software by the Timer0 module interrupt service routine before re-enabling this interrupt. The TMR0 interrupt cannot awaken the processor from SLEEP since the timer is shut off during SLEEP.

FIGURE 4-2: BLOCK DIAGRAM OF THE TIMER0/WDT PRESCALER

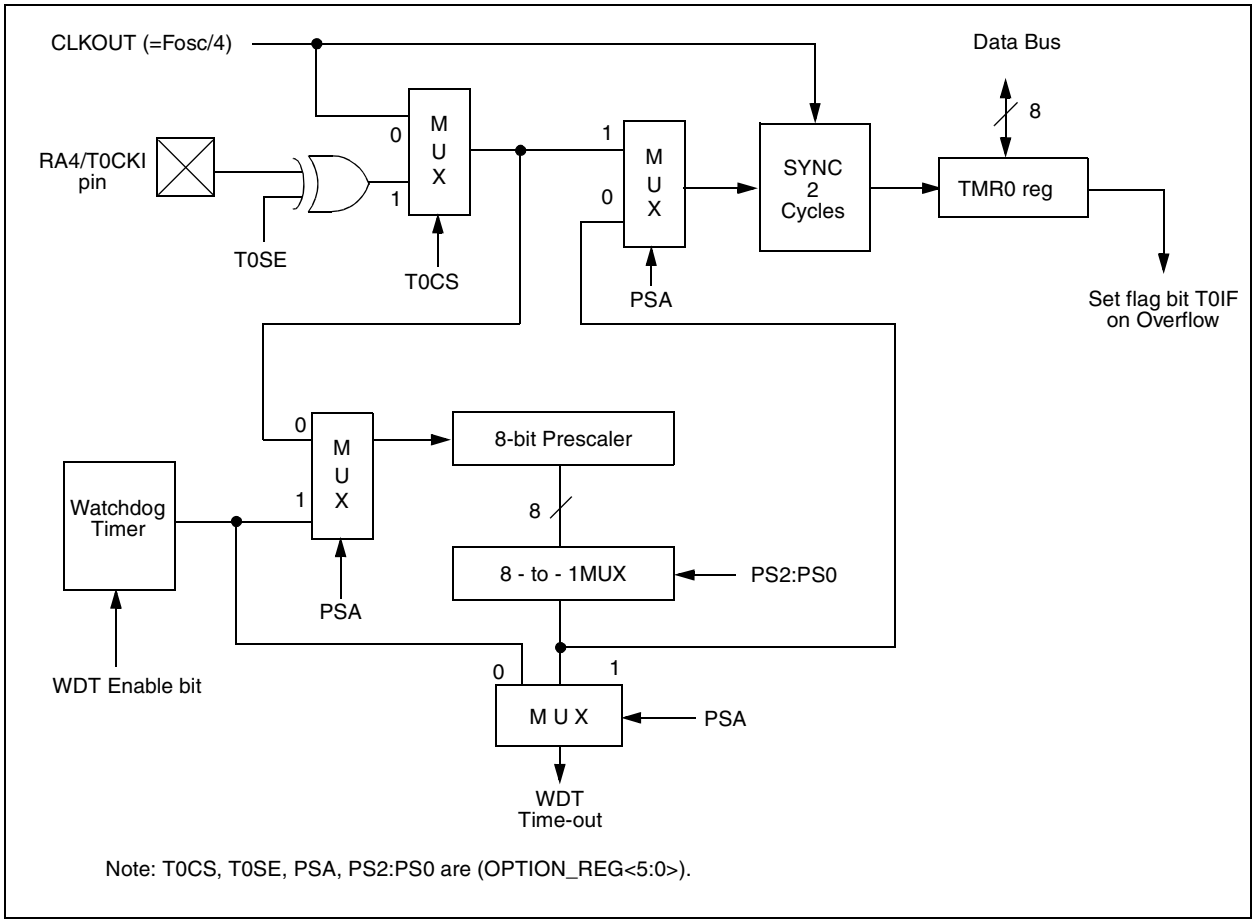

TABLE 4-1 REGISTERS ASSOCIATED WITH TIMER0

Address	Name	Bit 7	Bit 6	Bit 5	Bit 4	Bit 3	Bit 2	Bit 1	Bit 0	Value on: POR, BOR	Value on all other resets
01h,101h	TMR0	Timer0 module’s register								xxxx xxxx	uuuu uuuu
0Bh,8Bh, 10Bh,18Bh	INTCON	GIE	PEIE	T0IE	INTE	RBIE	T0IF	INTF	RBIF	0000 000x	0000 000u
81h,181h	OPTION_REG	$\overline{\text{RBPU}}$	INTEDG	T0CS	T0SE	PSA	PS2	PS1	PS0	1111 1111	1111 1111
85h	TRISA	—	—	PORTA Data Direction Register						--11 1111	--11 1111

Legend: x = unknown, u = unchanged, - = unimplemented locations read as '0'. Shaded cells are not used by Timer0.

 © 1998-2013 Microchip Technology Inc.

5.0 TIMER1 MODULE

The Timer1 module timer/counter has the following features:

- 16-bit timer/counter
  (Two 8-bit registers; TMR1H and TMR1L)
- Readable and writable (Both registers)
- Internal or external clock select
- Interrupt on overflow from FFFFh to 0000h
- Reset from CCP module trigger

Timer1 has a control register, shown in Figure 5-1. Timer1 can be enabled/disabled by setting/clearing control bit TMR1ON (T1CON<0>).

Figure 5-2 is a simplified block diagram of the Timer1 module.

Additional information on timer modules is available in the PIC® Mid-Range MCU Reference Manual, DS33023.

5.1 Timer1 Operation

Timer1 can operate in one of these modes:

- As a timer
- As a synchronous counter
- As an asynchronous counter

The operating mode is determined by the clock select bit, TMR1CS (T1CON<1>).

In timer mode, Timer1 increments every instruction cycle. In counter mode, it increments on every rising edge of the external clock input.

When the Timer1 oscillator is enabled (T1OSCEN is set), the RC1/T1OSI and RC0/T1OSO/T1CKI pins become inputs. That is, the TRISC<1:0> value is ignored.

Timer1 also has an internal “reset input”. This reset can be generated by the CCP module (Section 7.0).

FIGURE 5-1: T1CON: TIMER1 CONTROL REGISTER (ADDRESS 10h)

U-0	U-0	R/W-0	R/W-0	R/W-0	R/W-0	R/W-0	R/W-0
—	—	T1CKPS1	T1CKPS0	T1OSCEN	$\overline{\text{T1SYNC}}$	TMR1CS	TMR1ON
bit7							bit0

R = Readable bit
W = Writable bit
U = Unimplemented bit, read as ‘0’
- n = Value at POR reset

bit 7-6: **Unimplemented:** Read as '0'

bit 5-4: **T1CKPS1:T1CKPS0**: Timer1 Input Clock Prescale Select bits
`11` = 1:8 Prescale value
`10` = 1:4 Prescale value
`01` = 1:2 Prescale value
`00` = 1:1 Prescale value

bit 3: **T1OSCEN**: Timer1 Oscillator Enable Control bit
1 = Oscillator is enabled
0 = Oscillator is shut off
Note: The oscillator inverter and feedback resistor are turned off to eliminate power drain

bit 2: **$\overline{\text{T1SYNC}}$**: Timer1 External Clock Input Synchronization Control bit

TMR1CS = 1
1 = Do not synchronize external clock input
0 = Synchronize external clock input

TMR1CS = 0
This bit is ignored. Timer1 uses the internal clock when TMR1CS = 0.

bit 1: **TMR1CS**: Timer1 Clock Source Select bit
1 = External clock from pin RC0/T1OSO/T1CKI (on the rising edge)
0 = Internal clock (FOSC/4)

bit 0: **TMR1ON**: Timer1 On bit
1 = Enables Timer1
0 = Stops Timer1

FIGURE 5-2: TIMER1 BLOCK DIAGRAM

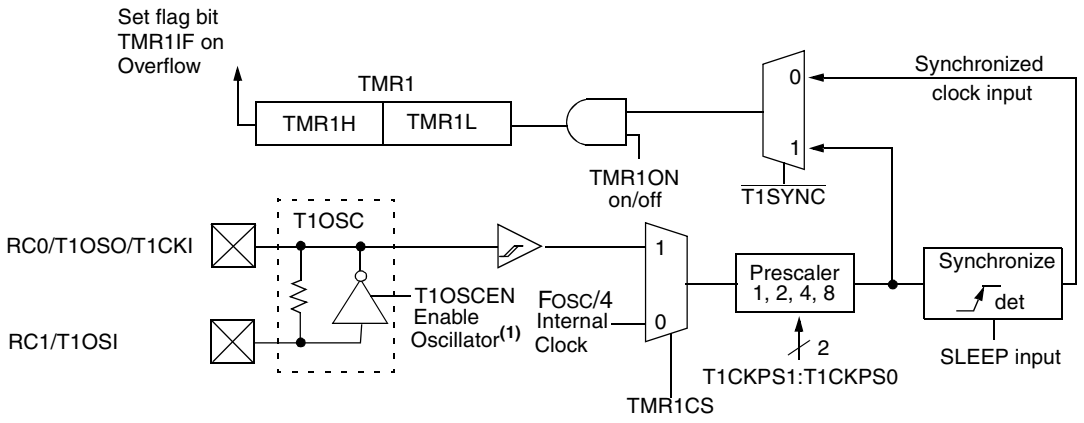

Note 1: When the T1OSCEN bit is cleared, the inverter and feedback resistor are turned off. This eliminates power drain.

 © 1998-2013 Microchip Technology Inc.

5.2 Timer1 Oscillator

A crystal oscillator circuit is built in between pins T1OSI (input) and T1OSO (amplifier output). It is enabled by setting control bit T1OSCEN (T1CON<3>). The oscillator is a low power oscillator rated up to 200 kHz. It will continue to run during SLEEP. It is primarily intended for a 32 kHz crystal. Table 5-1 shows the capacitor selection for the Timer1 oscillator.

The Timer1 oscillator is identical to the LP oscillator. The user must provide a software time delay to ensure proper oscillator start-up.

TABLE 5-1 CAPACITOR SELECTION FOR THE TIMER1 OSCILLATOR

Osc Type	Freq	C1	C2
LP	32 kHz	33 pF	33 pF
	100 kHz	15 pF	15 pF
	200 kHz	15 pF	15 pF
These values are for design guidance only.			
Crystals Tested:			
32.768 kHz	Epson C-001R32.768K-A	± 20 PPM	
100 kHz	Epson C-2 100.00 KC-P	± 20 PPM	
200 kHz	STD XTL 200.000 kHz	± 20 PPM	

Note 1: Higher capacitance increases the stability of oscillator but also increases the start-up time.
2: Since each resonator/crystal has its own characteristics, the user should consult the resonator/crystal manufacturer for appropriate values of external components.

5.3 Timer1 Interrupt

The TMR1 Register pair (TMR1H:TMR1L) increments from 0000h to FFFFh and rolls over to 0000h. The TMR1 Interrupt, if enabled, is generated on overflow which is latched in interrupt flag bit TMR1IF (PIR1<0>). This interrupt can be enabled/disabled by setting/clearing TMR1 interrupt enable bit TMR1IE (PIE1<0>).

5.4 Resetting Timer1 using a CCP Trigger Output

If the CCP module is configured in compare mode to generate a “special event trigger" (CCP1M3:CCP1M0 = `1011`), this signal will reset Timer1 and start an A/D conversion (if the A/D module is enabled).

Note: The special event triggers from the CCP1 module will not set interrupt flag bit TMR1IF (PIR1<0>).

Timer1 must be configured for either timer or synchronized counter mode to take advantage of this feature. If Timer1 is running in asynchronous counter mode, this reset operation may not work.

In the event that a write to Timer1 coincides with a special event trigger from CCP1, the write will take precedence.

In this mode of operation, the CCPR1H:CCPR1L registers pair effectively becomes the period register for Timer1.

TABLE 5-2 REGISTERS ASSOCIATED WITH TIMER1 AS A TIMER/COUNTER

Address	Name	Bit 7	Bit 6	Bit 5	Bit 4	Bit 3	Bit 2	Bit 1	Bit 0	Value on: POR, BOR	Value on all other resets
0Bh,8Bh	INTCON	GIE	PEIE	T0IE	INTE	RBIE	T0IF	INTF	RBIF	`0000 000x`	`0000 000u`
0Ch	PIR1	(1)	ADIF	(1)	(1)	SSPIF	CCP1IF	TMR2IF	TMR1IF	`0000 0000`	`0000 0000`
8Ch	PIE1	(1)	ADIE	(1)	(1)	SSPIE	CCP1IE	TMR2IE	TMR1IE	`0000 0000`	`0000 0000`
0Eh	TMR1L	Holding register for the Least Significant Byte of the 16-bit TMR1 register								`xxxx xxxx`	`uuuu uuuu`
0Fh	TMR1H	Holding register for the Most Significant Byte of the 16-bit TMR1 register								`xxxx xxxx`	`uuuu uuuu`
10h	T1CON	—	—	T1CKPS1	T1CKPS0	T1OSCEN	$\overline{\text{T1SYNC}}$	TMR1CS	TMR1ON	`--00 0000`	`--uu uuuu`

Legend: `x` = unknown, `u` = unchanged, `-` = unimplemented read as '0'. Shaded cells are not used by the Timer1 module.
Note 1: These bits are unimplemented, read as '0'.

NOTES:

 © 1998-2013 Microchip Technology Inc.

6.0 TIMER2 MODULE

The Timer2 module timer has the following features:

- 8-bit timer (TMR2 register)
- 8-bit period register (PR2)
- Readable and writable (Both registers)
- Software programmable prescaler (1:1, 1:4, 1:16)
- Software programmable postscaler (1:1 to 1:16)
- Interrupt on TMR2 match of PR2
- SSP module optional use of TMR2 output to generate clock shift

Timer2 has a control register, shown in Figure 6-2. Timer2 can be shut off by clearing control bit TMR2ON (T2CON<2>) to minimize power consumption.

Figure 6-1 is a simplified block diagram of the Timer2 module.

Additional information on timer modules is available in the PIC® Mid-Range MCU Reference Manual, DS33023.

6.1 Timer2 Operation

Timer2 can be used as the PWM time-base for PWM mode of the CCP module.

The TMR2 register is readable and writable, and is cleared on any device reset.

The input clock (FOSC/4) has a prescale option of 1:1, 1:4 or 1:16, selected by control bits T2CKPS1:T2CKPS0 (T2CON<1:0>).

The match output of TMR2 goes through a 4-bit postscaler (which gives a 1:1 to 1:16 scaling inclusive) to generate a TMR2 interrupt (latched in flag bit TMR2IF, (PIR1<1>)).

The prescaler and postscaler counters are cleared when any of the following occurs:

- a write to the TMR2 register
- a write to the T2CON register
- any device reset (Power-on Reset, $\overline{\text{MCLR}}$ reset, Watchdog Timer reset, or Brown-out Reset)

TMR2 is not cleared when T2CON is written.

6.2 Timer2 Interrupt

The Timer2 module has an 8-bit period register PR2. Timer2 increments from 00h until it matches PR2 and then resets to 00h on the next increment cycle. PR2 is a readable and writable register. The PR2 register is initialized to FFh upon reset.

6.3 Output of TMR2

The output of TMR2 (before the postscaler) is fed to the Synchronous Serial Port module which optionally uses it to generate shift clock.

FIGURE 6-1: TIMER2 BLOCK DIAGRAM

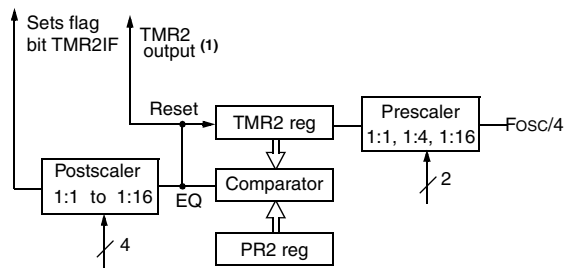

Note 1: TMR2 register output can be software selected by the SSP Module as a baud clock.

FIGURE 6-2: T2CON: TIMER2 CONTROL REGISTER (ADDRESS 12h)

U-0	R/W-0	R/W-0	R/W-0	R/W-0	R/W-0	R/W-0	R/W-0
—	TOUTPS3	TOUTPS2	TOUTPS1	TOUTPS0	TMR2ON	T2CKPS1	T2CKPS0
bit7							bit0

R = Readable bit
W = Writable bit
U = Unimplemented bit, read as '0'
- n = Value at POR reset

bit 7: **Unimplemented:** Read as '0'

bit 6-3: **TOUTPS3:TOUTPS0**: Timer2 Output Postscale Select bits
`0000` = 1:1 Postscale
`0001` = 1:2 Postscale
•
•
•
`1111` = 1:16 Postscale

bit 2: **TMR2ON**: Timer2 On bit
1 = Timer2 is on
0 = Timer2 is off

bit 1-0: **T2CKPS1:T2CKPS0**: Timer2 Clock Prescale Select bits
`00` = Prescaler is 1
`01` = Prescaler is 4
`1x` = Prescaler is 16

TABLE 6-1 REGISTERS ASSOCIATED WITH TIMER2 AS A TIMER/COUNTER

Address	Name	Bit 7	Bit 6	Bit 5	Bit 4	Bit 3	Bit 2	Bit 1	Bit 0	Value on: POR, BOR	Value on all other resets
0Bh,8Bh	INTCON	GIE	PEIE	T0IE	INTE	RBIE	T0IF	INTF	RBIF	0000 000x	0000 000u
0Ch	PIR1	(1)	ADIF	(1)	(1)	SSPIF	CCP1IF	TMR2IF	TMR1IF	0000 0000	0000 0000
8Ch	PIE1	(1)	ADIE	(1)	(1)	SSPIE	CCP1IE	TMR2IE	TMR1IE	0000 0000	0000 0000
11h	TMR2	Timer2 module's register								0000 0000	0000 0000
12h	T2CON	—	TOUTPS3	TOUTPS2	TOUTPS1	TOUTPS0	TMR2ON	T2CKPS1	T2CKPS0	-000 0000	-000 0000
92h	PR2	Timer2 Period Register								1111 1111	1111 1111

Legend: `x` = unknown, `u` = unchanged, `-` = unimplemented read as '0'. Shaded cells are not used by the Timer2 module.
2: These bits are unimplemented, read as '0'.

 © 1998-2013 Microchip Technology Inc.

7.0 CAPTURE/COMPARE/PWM (CCP) MODULE

The CCP (Capture/Compare/PWM) module contains a 16-bit register which can operate as a 16-bit capture register, as a 16-bit compare register or as a PWM master/slave Duty Cycle register. Table 7-1 shows the timer resources of the CCP module modes.

Capture/Compare/PWM Register1 (CCPR1) is comprised of two 8-bit registers: CCPR1L (low byte) and CCPR1H (high byte). The CCP1CON register controls the operation of CCP1. All are readable and writable.

Additional information on the CCP module is available in the PIC® Mid-Range MCU Reference Manual, DS33023.

TABLE 7-1 CCP MODE - TIMER RESOURCE

CCP Mode	Timer Resource
Capture	Timer1
Compare	Timer1
PWM	Timer2

FIGURE 7-1: CCP1CON REGISTER (ADDRESS 17h)

U-0	U-0	R/W-0	R/W-0	R/W-0	R/W-0	R/W-0	R/W-0
—	—	CCP1X	CCP1Y	CCP1M3	CCP1M2	CCP1M1	CCP1M0
bit7							bit0

R = Readable bit
W = Writable bit
U = Unimplemented bit, read as ‘0’
- n =Value at POR reset

bit 7-6: **Unimplemented:** Read as '0'

bit 5-4: **CCP1X:CCP1Y**: PWM Least Significant bits
Capture Mode: Unused
Compare Mode: Unused
PWM Mode: These bits are the two LSbs of the PWM duty cycle. The eight MSbs are found in CCPR1L.

bit 3-0: **CCP1M3:CCP1M0**: CCP1 Mode Select bits
`0000` = Capture/Compare/PWM off (resets CCP1 module)
`0100` = Capture mode, every falling edge
`0101` = Capture mode, every rising edge
`0110` = Capture mode, every 4th rising edge
`0111` = Capture mode, every 16th rising edge
`1000` = Compare mode, set output on match (CCP1IF bit is set)
`1001` = Compare mode, clear output on match (CCP1IF bit is set)
`1010` = Compare mode, generate software interrupt on match (CCP1IF bit is set, CCP1 pin is unaffected)
`1011` = Compare mode, trigger special event (CCP1IF bit is set; CCP1 resets TMR1 and starts an A/D conversion (if A/D module is enabled))
`11xx` = PWM mode

7.1 Capture Mode

In Capture mode, CCPR1H:CCPR1L captures the 16-bit value of the TMR1 register when an event occurs on pin RC2/CCP1. An event is defined as:

- every falling edge
- every rising edge
- every 4th rising edge
- every 16th rising edge

An event is selected by control bits CCP1M3:CCP1M0 (CCP1CON<3:0>). When a capture is made, the interrupt request flag bit CCP1IF (PIR1<2>) is set. It must be cleared in software. If another capture occurs before the value in register CCPR1 is read, the old captured value will be lost.

7.1.1 CCP PIN CONFIGURATION

In Capture mode, the RC2/CCP1 pin should be configured as an input by setting the TRISC<2> bit.

Note:	If the RC2/CCP1 is configured as an output, a write to the port can cause a capture condition.

FIGURE 7-2: CAPTURE MODE OPERATION BLOCK DIAGRAM

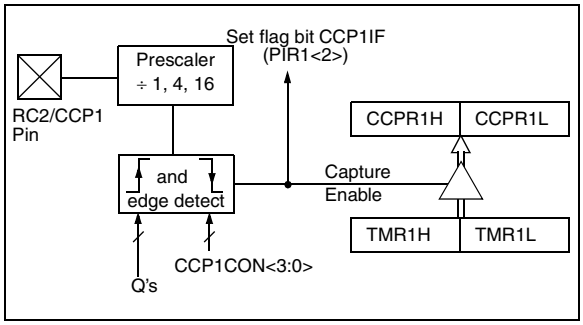

7.1.2 TIMER1 MODE SELECTION

Timer1 must be running in timer mode or synchronized counter mode for the CCP module to use the capture feature. In asynchronous counter mode, the capture operation may not work.

7.1.3 SOFTWARE INTERRUPT

When the Capture mode is changed, a false capture interrupt may be generated. The user should keep bit CCP1IE (PIE1<2>) clear to avoid false interrupts and should clear the flag bit CCP1IF following any such change in operating mode.

7.1.4 CCP PRESCALER

There are four prescaler settings, specified by bits CCP1M3:CCP1M0. Whenever the CCP module is turned off, or the CCP module is not in capture mode, the prescaler counter is cleared. This means that any reset will clear the prescaler counter.

Switching from one capture prescaler to another may generate an interrupt. Also, the prescaler counter will not be cleared, therefore the first capture may be from a non-zero prescaler. Example 7-1 shows the recommended method for switching between capture prescalers. This example also clears the prescaler counter and will not generate the “false” interrupt.

EXAMPLE 7-1: CHANGING BETWEEN CAPTURE PRESCALERS

```
CLRF    CCP1CON       ;Turn CCP module off
MOVLW   NEW_CAPT_PS   ;Load the W reg with
                      ; the new prescaler
                      ; mode value and CCP ON
MOVWF   CCP1CON       ;Load CCP1CON with this
                      ; value
```

 © 1998-2013 Microchip Technology Inc.

7.2 Compare Mode

In Compare mode, the 16-bit CCPR1 register value is constantly compared against the TMR1 register pair value. When a match occurs, the RC2/CCP1 pin is:

- driven High
- driven Low
- remains Unchanged

The action on the pin is based on the value of control bits CCP1M3:CCP1M0 (CCP1CON<3:0>). At the same time, interrupt flag bit CCP1IF is set.

FIGURE 7-3: COMPARE MODE OPERATION BLOCK DIAGRAM

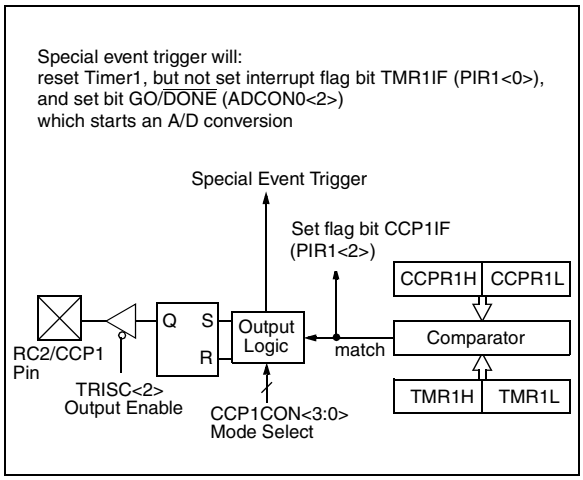

7.2.1 CCP PIN CONFIGURATION

The user must configure the RC2/CCP1 pin as an output by clearing the TRISC<2> bit.

> **Note:** Clearing the CCP1CON register will force the RC2/CCP1 compare output latch to the default low level. This is not the data latch.

7.2.2 TIMER1 MODE SELECTION

Timer1 must be running in Timer mode or Synchronized Counter mode if the CCP module is using the compare feature. In Asynchronous Counter mode, the compare operation may not work.

7.2.3 SOFTWARE INTERRUPT MODE

When generate software interrupt is chosen the CCP1 pin is not affected. Only a CCP interrupt is generated (if enabled).

7.2.4 SPECIAL EVENT TRIGGER

In this mode, an internal hardware trigger is generated which may be used to initiate an action.

The special event trigger output of CCP1 resets the TMR1 register pair. This allows the CCPR1 register to effectively be a 16-bit programmable period register for Timer1.

The special trigger output of CCP1 resets the TMR1 register pair, and starts an A/D conversion (if the A/D module is enabled).

> **Note:** The special event trigger from the CCP1 module will not set interrupt flag bit TMR1IF (PIR1<0>).

TABLE 7-2 REGISTERS ASSOCIATED WITH CAPTURE, COMPARE, AND TIMER1

Address	Name	Bit 7	Bit 6	Bit 5	Bit 4	Bit 3	Bit 2	Bit 1	Bit 0	Value on: POR, BOR	Value on all other resets
0Bh,8Bh	INTCON	GIE	PEIE	T0IE	INTE	RBIE	T0IF	INTF	RBIF	0000 000x	0000 000u
0Ch	PIR1	(1)	ADIF	(1)	(1)	SSPIF	CCP1IF	TMR2IF	TMR1IF	0000 0000	0000 0000
8Ch	PIE1	(1)	ADIE	(1)	(1)	SSPIE	CCP1IE	TMR2IE	TMR1IE	0000 0000	0000 0000
87h	TRISC	PORTC Data Direction Register								1111 1111	1111 1111
0Eh	TMR1L	Holding register for the Least Significant Byte of the 16-bit TMR1 register								xxxx xxxx	uuuu uuuu
0Fh	TMR1H	Holding register for the Most Significant Byte of the 16-bit TMR1register								xxxx xxxx	uuuu uuuu
10h	T1CON	—	—	T1CKPS1	T1CKPS0	T1OSCEN	$\overline{\text{T1SYNC}}$	TMR1CS	TMR1ON	--00 0000	--uu uuuu
15h	CCPR1L	Capture/Compare/PWM register1 (LSB)								xxxx xxxx	uuuu uuuu
16h	CCPR1H	Capture/Compare/PWM register1 (MSB)								xxxx xxxx	uuuu uuuu
17h	CCP1CON	—	—	CCP1X	CCP1Y	CCP1M3	CCP1M2	CCP1M1	CCP1M0	--00 0000	--00 0000

Legend: x = unknown, u = unchanged, - = unimplemented read as '0'. Shaded cells are not used by Capture and Timer1.
Note 1: These bits/registers are unimplemented, read as '0'.

7.3 PWM Mode

In Pulse Width Modulation (PWM) mode, the CCP1 pin produces up to a 10-bit resolution PWM output. Since the CCP1 pin is multiplexed with the PORTC data latch, the TRISC<2> bit must be cleared to make the CCP1 pin an output.

Note:	Clearing the CCP1CON register will force the CCP1 PWM output latch to the default low level. This is not the PORTC I/O data latch.

Figure 7-4 shows a simplified block diagram of the CCP module in PWM mode.

For a step by step procedure on how to set up the CCP module for PWM operation, see Section 7.3.3.

FIGURE 7-4: SIMPLIFIED PWM BLOCK DIAGRAM

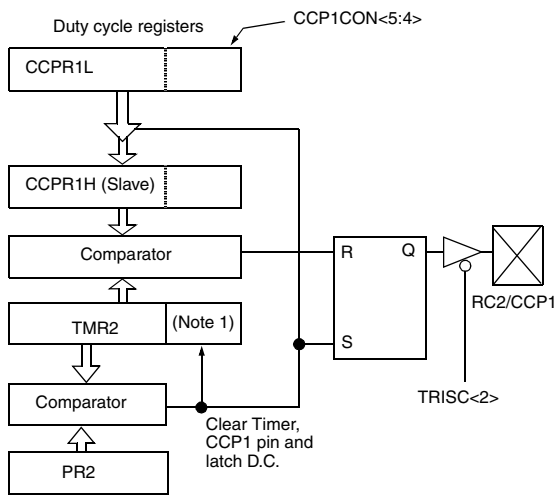

Note 1: 8-bit timer is concatenated with 2-bit internal Q clock or 2 bits of the prescaler to create 10-bit time-base.

A PWM output (Figure 7-5) has a time base (period) and a time that the output stays high (duty cycle). The frequency of the PWM is the inverse of the period (1/period).

FIGURE 7-5: PWM OUTPUT

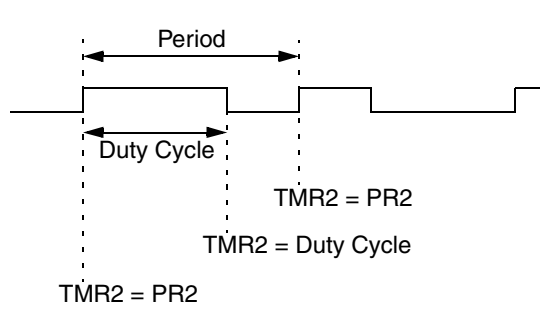

7.3.1 PWM PERIOD

The PWM period is specified by writing to the PR2 register. The PWM period can be calculated using the following formula:

$$\text{PWM period} = [(PR2) + 1] \cdot 4 \cdot T_{OSC} \cdot (\text{TMR2 prescale value})$$

PWM frequency is defined as 1 / [PWM period].

When TMR2 is equal to PR2, the following three events occur on the next increment cycle:

- TMR2 is cleared
- The CCP1 pin is set (exception: if PWM duty cycle = 0%, the CCP1 pin will not be set)
- The PWM duty cycle is latched from CCPR1L into CCPR1H

Note:	The Timer2 postscaler (see Section 6.0) is not used in the determination of the PWM frequency. The postscaler could be used to have a servo update rate at a different frequency than the PWM output.

7.3.2 PWM DUTY CYCLE

The PWM duty cycle is specified by writing to the CCPR1L register and to the CCP1CON<5:4> bits. Up to 10-bit resolution is available: the CCPR1L contains the eight MSbs and the CCP1CON<5:4> contains the two LSbs. This 10-bit value is represented by CCPR1L:CCP1CON<5:4>. The following equation is used to calculate the PWM duty cycle in time:

$$\text{PWM duty cycle} = (CCPR1L{:}CCP1CON\langle 5{:}4\rangle) \cdot Tosc \cdot (\text{TMR2 prescale value})$$

CCPR1L and CCP1CON<5:4> can be written to at any time, but the duty cycle value is not latched into CCPR1H until after a match between PR2 and TMR2 occurs (i.e., the period is complete). In PWM mode, CCPR1H is a read-only register.

The CCPR1H register and a 2-bit internal latch are used to double buffer the PWM duty cycle. This double buffering is essential for glitchless PWM operation.

When the CCPR1H and 2-bit latch match TMR2 concatenated with an internal 2-bit Q clock or 2 bits of the TMR2 prescaler, the CCP1 pin is cleared.

Maximum PWM resolution (bits) for a given PWM frequency:

$$= \frac{\log\left(\frac{F_{OSC}}{F_{PWM}}\right)}{\log(2)} \text{ bits}$$

Note:	If the PWM duty cycle value is longer than the PWM period the CCP1 pin will not be cleared.

 © 1998-2013 Microchip Technology Inc.

For an example PWM period and duty cycle calculation, see the PIC® Mid-Range MCU Reference Manual (DS33023).

7.3.3 SET-UP FOR PWM OPERATION

The following steps should be taken when configuring the CCP module for PWM operation:

1. Set the PWM period by writing to the PR2 register.
2. Set the PWM duty cycle by writing to the CCPR1L register and CCP1CON<5:4> bits.
3. Make the CCP1 pin an output by clearing the TRISC<2> bit.
4. Set the TMR2 prescale value and enable Timer2 by writing to T2CON.
5. Configure the CCP1 module for PWM operation.

TABLE 7-3 EXAMPLE PWM FREQUENCIES AND RESOLUTIONS AT 20 MHz

PWM Frequency	1.22 kHz	4.88 kHz	19.53 kHz	78.12 kHz	156.3 kHz	208.3 kHz
Timer Prescaler (1, 4, 16)	16	4	1	1	1	1
PR2 Value	0xFF	0xFF	0xFF	0x3F	0x1F	0x17
Maximum Resolution (bits)	10	10	10	8	7	5.5

TABLE 7-4 REGISTERS ASSOCIATED WITH PWM AND TIMER2

Address	Name	Bit 7	Bit 6	Bit 5	Bit 4	Bit 3	Bit 2	Bit 1	Bit 0	Value on: POR, BOR	Value on all other resets
0Bh,8Bh	INTCON	GIE	PEIE	T0IE	INTE	RBIE	T0IF	INTF	RBIF	0000 000x	0000 000u
0Ch	PIR1	(1)	ADIF	(1)	(1)	SSPIF	CCP1IF	TMR2IF	TMR1IF	0000 0000	0000 0000
8Ch	PIE1	(1)	ADIE	(1)	(1)	SSPIE	CCP1IE	TMR2IE	TMR1IE	0000 0000	0000 0000
87h	TRISC	PORTC Data Direction Register								1111 1111	1111 1111
11h	TMR2	Timer2 module's register								0000 0000	0000 0000
92h	PR2	Timer2 module's period register								1111 1111	1111 1111
12h	T2CON	—	TOUTPS 3	TOUTPS 2	TOUTPS 1	TOUTPS 0	TMR2ON	T2CKPS 1	T2CKPS 0	-000 0000	-000 0000
15h	CCPR1L	Capture/Compare/PWM register1 (LSB)								xxxx xxxx	uuuu uuuu
16h	CCPR1H	Capture/Compare/PWM register1 (MSB)								xxxx xxxx	uuuu uuuu
17h	CCP1CON	—	—	CCP1X	CCP1Y	CCP1M3	CCP1M2	CCP1M1	CCP1M0	--00 0000	--00 0000

Legend: x = unknown, u = unchanged, - = unimplemented read as '0'. Shaded cells are not used by PWM and Timer2.
Note 1: These bits/registers are unimplemented, read as '0'.

NOTES:

 © 1998-2013 Microchip Technology Inc.

8.0 SYNCHRONOUS SERIAL PORT (SSP) MODULE

8.1 SSP Module Overview

The Synchronous Serial Port (SSP) module is a serial interface useful for communicating with other peripheral or microcontroller devices. These peripheral devices may be Serial EEPROMs, shift registers, display drivers, A/D converters, etc. The SSP module can operate in one of two modes:

- Serial Peripheral Interface (SPI)
- Inter-Integrated Circuit (I^2C)

The SSP module in I^2C mode works the same in all PIC16C72 series devices that have an SSP module. However the SSP Module in SPI mode has differences between the PIC16C72 and the PIC16CR72 device.

The register definitions and operational description of SPI mode has been split into two sections because of the differences between the PIC16C72 and the PIC16CR72 device. The default reset values of both the SPI modules is the same regardless of the device:

8.2 SPI Mode for PIC16C72 40

8.3 SPI Mode for PIC16CR72 43

8.4 SSP I^2C Operation 47

For an I^2C Overview, refer to the PIC® Mid-Range MCU Reference Manual (DS33023). Also, refer to Application Note AN578, *"Use of the SSP Module in the I^2C Multi-Master Environment."*

8.2 SPI Mode for PIC16C72

This section contains register definitions and operational characteristics of the SPI module on the PIC16C72 device only.

Additional information on SPI operation may be found in the PIC® Mid-Range MCU Reference Manual, DS33023.

FIGURE 8-1: SSPSTAT: SYNC SERIAL PORT STATUS REGISTER (ADDRESS 94h) (PIC16C72)

U-0	U-0	R-0	R-0	R-0	R-0	R-0	R-0
—	—	D/$\overline{A}$	P	S	R/$\overline{W}$	UA	BF
bit7							bit0

R = Readable bit
W = Writable bit
U = Unimplemented bit, read as '0'
- n =Value at POR reset

bit 7-6: **Unimplemented:** Read as '0'

bit 5: **D/$\overline{A}$**: Data/Address bit (I^2C mode only)
1 = Indicates that the last byte received or transmitted was data
0 = Indicates that the last byte received or transmitted was address

bit 4: **P**: Stop bit (I^2C mode only. This bit is cleared when the SSP module is disabled, SSPEN is cleared)
1 = Indicates that a stop bit has been detected last (this bit is '0' on RESET)
0 = Stop bit was not detected last

bit 3: **S**: Start bit (I^2C mode only. This bit is cleared when the SSP module is disabled, SSPEN is cleared)
1 = Indicates that a start bit has been detected last (this bit is '0' on RESET)
0 = Start bit was not detected last

bit 2: **R/$\overline{W}$**: Read/Write bit information (I^2C mode only)
This bit holds the R/W bit information following the last address match. This bit is valid from the address match to the next start bit, stop bit, or $\overline{ACK}$ bit.
1 = Read
0 = Write

bit 1: **UA**: Update Address (10-bit I^2C mode only)
1 = Indicates that the user needs to update the address in the SSPADD register
0 = Address does not need to be updated

bit 0: **BF**: Buffer Full Status bit

Receive (SPI and I^2C modes)
1 = Receive complete, SSPBUF is full
0 = Receive not complete, SSPBUF is empty

Transmit (I^2C mode only)
1 = Transmit in progress, SSPBUF is full
0 = Transmit complete, SSPBUF is empty

 © 1998-2013 Microchip Technology Inc.

FIGURE 8-2: SSPCON: SYNC SERIAL PORT CONTROL REGISTER (ADDRESS 14h) (PIC16C72)

R/W-0	R/W-0	R/W-0	R/W-0	R/W-0	R/W-0	R/W-0	R/W-0
WCOL	SSPOV	SSPEN	CKP	SSPM3	SSPM2	SSPM1	SSPM0
bit7							bit0

R = Readable bit
W = Writable bit
U = Unimplemented bit, read as '0'
- n =Value at POR reset

bit 7: **WCOL**: Write Collision Detect bit
1 = The SSPBUF register is written while it is still transmitting the previous word (must be cleared in software)
0 = No collision

bit 6: **SSPOV**: Receive Overflow Detect bit

In SPI mode
1 = A new byte is received while the SSPBUF register is still holding the previous data. In case of overflow, the data in SSPSR register is lost. Overflow can only occur in slave mode. The user must read the SSPBUF, even if only transmitting data, to avoid setting overflow. In master operation, the overflow bit is not set since each new reception (and transmission) is initiated by writing to the SSPBUF register.
0 = No overflow

In I^2C mode
1 = A byte is received while the SSPBUF register is still holding the previous byte. SSPOV is a "don't care" in transmit mode. SSPOV must be cleared in software in either mode.
0 = No overflow

bit 5: **SSPEN**: Synchronous Serial Port Enable bit

In SPI mode
1 = Enables serial port and configures SCK, SDO, and SDI as serial port pins
0 = Disables serial port and configures these pins as I/O port pins

In I^2C mode
1 = Enables the serial port and configures the SDA and SCL pins as serial port pins
0 = Disables serial port and configures these pins as I/O port pins
In both modes, when enabled, these pins must be properly configured as input or output.

bit 4: **CKP**: Clock Polarity Select bit

In SPI mode
1 = Idle state for clock is a high level. Transmit happens on falling edge, receive on rising edge.
0 = Idle state for clock is a low level. Transmit happens on rising edge, receive on falling edge.

In I^2C mode
SCK release control
1 = Enable clock
0 = Holds clock low (clock stretch) (Used to ensure data setup time)

bit 3-0: **SSPM3:SSPM0**: Synchronous Serial Port Mode Select bits
`0000` = SPI master operation, clock = Fosc/4
`0001` = SPI master operation, clock = Fosc/16
`0010` = SPI master operation, clock = Fosc/64
`0011` = SPI master operation, clock = TMR2 output/2
`0100` = SPI slave mode, clock = SCK pin. $\overline{SS}$ pin control enabled.
`0101` = SPI slave mode, clock = SCK pin. $\overline{SS}$ pin control disabled. $\overline{SS}$ can be used as I/O pin.
`0110` = I^2C slave mode, 7-bit address
`0111` = I^2C slave mode, 10-bit address
`1011` = I^2C firmware controlled master operation (slave idle)
`1110` = I^2C slave mode, 7-bit address with start and stop bit interrupts enabled
`1111` = I^2C slave mode, 10-bit address with start and stop bit interrupts enabled

8.2.1 OPERATION OF SSP MODULE IN SPI MODE - PIC16C72

A block diagram of the SSP Module in SPI Mode is shown in Figure 8-3.

The SPI mode allows 8-bits of data to be synchronously transmitted and received simultaneously. To accomplish communication, typically three pins are used:

- Serial Data Out (SDO) RC5/SDO
- Serial Data In (SDI) RC4/SDI/SDA
- Serial Clock (SCK) RC3/SCK/SCL

Additionally a fourth pin may be used when in a slave mode of operation:

- Slave Select ($\overline{SS}$) RA5/$\overline{SS}$/AN4

When initializing the SPI, several options need to be specified. This is done by programming the appropriate control bits in the SSPCON register (SSPCON<5:0>). These control bits allow the following to be specified:

- Master Operation (SCK is the clock output)
- Slave Mode (SCK is the clock input)
- Clock Polarity (Output/Input data on the Rising/Falling edge of SCK)
- Clock Rate (master operation only)
- Slave Select Mode (Slave mode only)

To enable the serial port, SSP enable bit SSPEN (SSPCON<5>) must be set. To reset or reconfigure SPI mode, clear enable bit SSPEN, re-initialize SSPCON register, and then set enable bit SSPEN. This configures the SDI, SDO, SCK, and $\overline{SS}$ pins as serial port pins. For the pins to behave as the serial port function, they must have their data direction bits (in the TRIS register) appropriately programmed. That is:

- SDI must have TRISC<4> set
- SDO must have TRISC<5> cleared
- SCK (master operation) must have TRISC<3> cleared
- SCK (Slave mode) must have TRISC<3> set
- $\overline{SS}$ must have TRISA<5> set (if implemented)

FIGURE 8-3: SSP BLOCK DIAGRAM (SPI MODE)

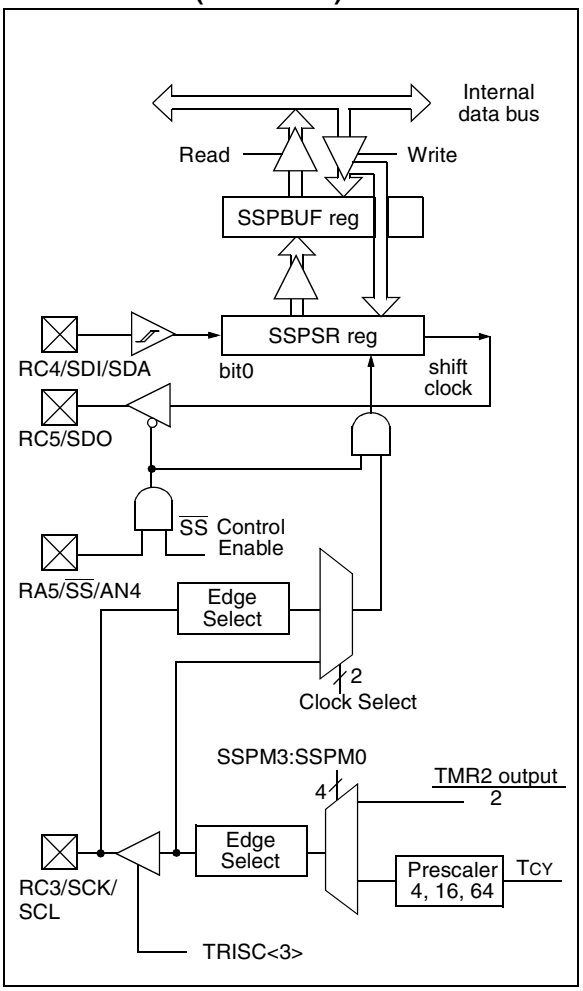

TABLE 8-1 REGISTERS ASSOCIATED WITH SPI OPERATION

Address	Name	Bit 7	Bit 6	Bit 5	Bit 4	Bit 3	Bit 2	Bit 1	Bit 0	Value on: POR, BOR	Value on all other resets
0Bh,8Bh	INTCON	GIE	PEIE	T0IE	INTE	RBIE	T0IF	INTF	RBIF	0000 000x	0000 000u
0Ch	PIR1	(1)	ADIF	(1)	(1)	SSPIF	CCP1IF	TMR2IF	TMR1IF	0000 0000	0000 0000
8Ch	PIE1	(1)	ADIE	(1)	(1)	SSPIE	CCP1IE	TMR2IE	TMR1IE	0000 0000	0000 0000
87h	TRISC	PORTC Data Direction Register								1111 1111	1111 1111
13h	SSPBUF	Synchronous Serial Port Receive Buffer/Transmit Register								xxxx xxxx	uuuu uuuu
14h	SSPCON	WCOL	SSPOV	SSPEN	CKP	SSPM3	SSPM2	SSPM1	SSPM0	0000 0000	0000 0000
85h	TRISA	—	—	PORTA Data Direction Register						--11 1111	--11 1111
94h	SSPSTAT	—	—	D/$\overline{A}$	P	S	R/$\overline{W}$	UA	BF	--00 0000	--00 0000

Legend: x = unknown, u = unchanged, - = unimplemented read as '0'. Shaded cells are not used by the SSP in SPI mode.
Note 1: These bits are unimplemented, read as '0'.

 © 1998-2013 Microchip Technology Inc.

8.3 SPI Mode for PIC16CR72

This section contains register definitions and operational characteristics of the SPI module on the PIC16CR72 device only.

Additional information on SPI operation may be found in the PIC® Mid-Range MCU Reference Manual, DS33023.

FIGURE 8-4: SSPSTAT: SYNC SERIAL PORT STATUS REGISTER (ADDRESS 94h) (PIC16CR72)

R/W-0	R/W-0	R-0	R-0	R-0	R-0	R-0	R-0
SMP	CKE	D/$\overline{A}$	P	S	R/$\overline{W}$	UA	BF
bit7							bit0

R = Readable bit
W = Writable bit
U = Unimplemented bit, read as '0'
- n =Value at POR reset

bit 7: **SMP:** SPI data input sample phase
SPI Master Operation
1 = Input data sampled at end of data output time
0 = Input data sampled at middle of data output time
SPI Slave Mode
SMP must be cleared when SPI is used in slave mode

bit 6: **CKE**: SPI Clock Edge Select
CKP = 0
1 = Data transmitted on rising edge of SCK
0 = Data transmitted on falling edge of SCK
CKP = 1
1 = Data transmitted on falling edge of SCK
0 = Data transmitted on rising edge of SCK

bit 5: **D/$\overline{A}$**: Data/$\overline{\text{Address}}$ bit (I^2C mode only)
1 = Indicates that the last byte received or transmitted was data
0 = Indicates that the last byte received or transmitted was address

bit 4: **P**: Stop bit (I^2C mode only. This bit is cleared when the SSP module is disabled, or when the Start bit is detected last, SSPEN is cleared)
1 = Indicates that a stop bit has been detected last (this bit is '0' on RESET)
0 = Stop bit was not detected last

bit 3: **S**: Start bit (I^2C mode only. This bit is cleared when the SSP module is disabled, or when the Stop bit is detected last, SSPEN is cleared)
1 = Indicates that a start bit has been detected last (this bit is '0' on RESET)
0 = Start bit was not detected last

bit 2: **R/$\overline{W}$**: Read/Write bit information (I^2C mode only)
This bit holds the R/W bit information following the last address match. This bit is only valid from the address match to the next start bit, stop bit, or $\overline{ACK}$ bit.
1 = Read
0 = Write

bit 1: **UA**: Update Address (10-bit I^2C mode only)
1 = Indicates that the user needs to update the address in the SSPADD register
0 = Address does not need to be updated

bit 0: **BF**: Buffer Full Status bit

Receive (SPI and I^2C modes)
1 = Receive complete, SSPBUF is full
0 = Receive not complete, SSPBUF is empty

Transmit (I^2C mode only)
1 = Transmit in progress, SSPBUF is full
0 = Transmit complete, SSPBUF is empty

FIGURE 8-5: SSPCON: SYNC SERIAL PORT CONTROL REGISTER (ADDRESS 14h) (PIC16CR72)

R/W-0	R/W-0	R/W-0	R/W-0	R/W-0	R/W-0	R/W-0	R/W-0
WCOL	SSPOV	SSPEN	CKP	SSPM3	SSPM2	SSPM1	SSPM0
bit7							bit0

R = Readable bit
W = Writable bit
U = Unimplemented bit, read as '0'
- n =Value at POR reset

bit 7: **WCOL**: Write Collision Detect bit
1 = The SSPBUF register is written while it is still transmitting the previous word (must be cleared in software)
0 = No collision

bit 6: **SSPOV**: Receive Overflow Indicator bit

In SPI mode
1 = A new byte is received while the SSPBUF register is still holding the previous data. In case of overflow, the data in SSPSR is lost. Overflow can only occur in slave mode. The user must read the SSPBUF, even if only transmitting data, to avoid setting overflow. In master operation, the overflow bit is not set since each new reception (and transmission) is initiated by writing to the SSPBUF register.
0 = No overflow

In I^2C mode
1 = A byte is received while the SSPBUF register is still holding the previous byte. SSPOV is a "don't care" in transmit mode. SSPOV must be cleared in software in either mode.
0 = No overflow

bit 5: **SSPEN**: Synchronous Serial Port Enable bit

In SPI mode
1 = Enables serial port and configures SCK, SDO, and SDI as serial port pins
0 = Disables serial port and configures these pins as I/O port pins

In I^2C mode
1 = Enables the serial port and configures the SDA and SCL pins as serial port pins
0 = Disables serial port and configures these pins as I/O port pins
In both modes, when enabled, these pins must be properly configured as input or output.

bit 4: **CKP**: Clock Polarity Select bit
In SPI mode
1 = Idle state for clock is a high level
0 = Idle state for clock is a low level
In I^2C mode
SCK release control
1 = Enable clock
0 = Holds clock low (clock stretch) (Used to ensure data setup time)

bit 3-0: **SSPM3:SSPM0**: Synchronous Serial Port Mode Select bits
`0000` = SPI master operation, clock = FOSC/4
`0001` = SPI master operation, clock = FOSC/16
`0010` = SPI master operation, clock = FOSC/64
`0011` = SPI master operation, clock = TMR2 output/2
`0100` = SPI slave mode, clock = SCK pin. $\overline{SS}$ pin control enabled.
`0101` = SPI slave mode, clock = SCK pin. $\overline{SS}$ pin control disabled. $\overline{SS}$ can be used as I/O pin
`0110` = I^2C slave mode, 7-bit address
`0111` = I^2C slave mode, 10-bit address
`1011` = I^2C firmware controlled master operation (slave idle)
`1110` = I^2C slave mode, 7-bit address with start and stop bit interrupts enabled
`1111` = I^2C slave mode, 10-bit address with start and stop bit interrupts enabled

8.3.1 OPERATION OF SSP MODULE IN SPI MODE - PIC16CR72

A block diagram of the SSP Module in SPI Mode is shown in Figure 8-6.

 © 1998-2013 Microchip Technology Inc.

The SPI mode allows 8-bits of data to be synchronously transmitted and received simultaneously. To accomplish communication, typically three pins are used:

- Serial Data Out (SDO) RC5/SDO
- Serial Data In (SDI) RC4/SDI/SDA
- Serial Clock (SCK) RC3/SCK/SCL

Additionally a fourth pin may be used when in a slave mode of operation:

- Slave Select ($\overline{SS}$) RA5/$\overline{SS}$/AN4

When initializing the SPI, several options need to be specified. This is done by programming the appropriate control bits in the SSPCON register (SSPCON<5:0>) and SSPSTAT<7:6>. These control bits allow the following to be specified:

- Master Operation (SCK is the clock output)
- Slave Mode (SCK is the clock input)
- Clock Polarity (Idle state of SCK)
- Clock Edge (Output data on rising/falling edge of SCK)
- Clock Rate (master operation only)
- Slave Select Mode (Slave mode only)

To enable the serial port, SSP Enable bit, SSPEN (SSPCON<5>) must be set. To reset or reconfigure SPI mode, clear bit SSPEN, re-initialize the SSPCON register, and then set bit SSPEN. This configures the SDI, SDO, SCK, and $\overline{SS}$ pins as serial port pins. For the pins to behave as the serial port function, they must have their data direction bits (in the TRISC register) appropriately programmed. That is:

- SDI must have TRISC<4> set
- SDO must have TRISC<5> cleared
- SCK (master operation) must have TRISC<3> cleared
- SCK (Slave mode) must have TRISC<3> set
- $\overline{SS}$ must have TRISA<5> set

Note:	When the SPI is in Slave Mode with $\overline{SS}$ pin control enabled, (SSPCON<3:0> = `0100`) the SPI module will reset if the $\overline{SS}$ pin is set to VDD.
Note:	If the SPI is used in Slave Mode with CKE = '1', then the $\overline{SS}$ pin control must be enabled.

FIGURE 8-6: SSP BLOCK DIAGRAM (SPI MODE)(PIC16CR72)

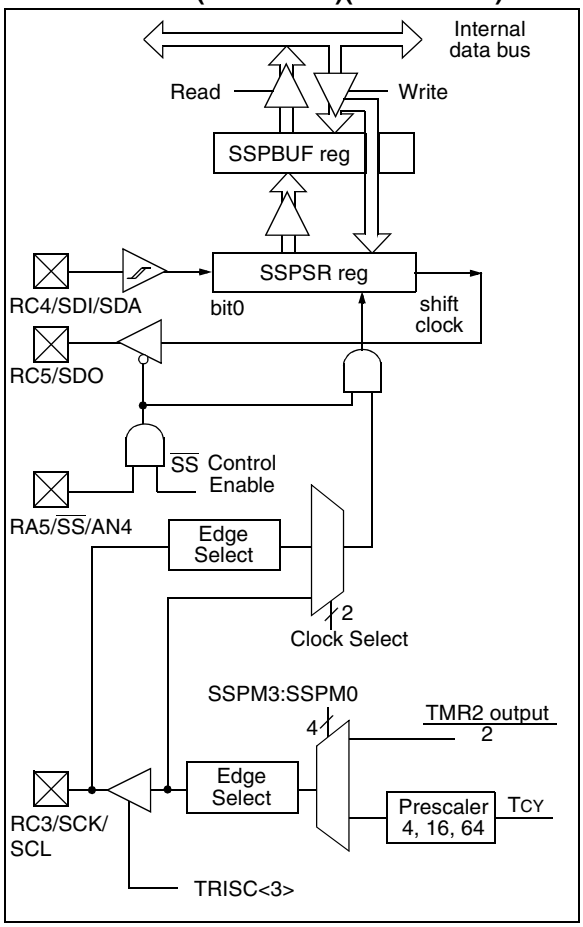

TABLE 8-2 REGISTERS ASSOCIATED WITH SPI OPERATION (PIC16CR72)

Address	Name	Bit 7	Bit 6	Bit 5	Bit 4	Bit 3	Bit 2	Bit 1	Bit 0	Value on: POR, BOR	Value on all other resets
0Bh,8Bh	INTCON	GIE	PEIE	T0IE	INTE	RBIE	T0IF	INTF	RBIF	0000 000x	0000 000u
0Ch	PIR1	(1)	ADIF	(1)	(1)	SSPIF	CCP1IF	TMR2IF	TMR1IF	0000 0000	0000 0000
8Ch	PIE1	(1)	ADIE	(1)	(1)	SSPIE	CCP1IE	TMR2IE	TMR1IE	0000 0000	0000 0000
87h	TRISC	PORTC Data Direction Register								1111 1111	1111 1111
13h	SSPBUF	Synchronous Serial Port Receive Buffer/Transmit Register								xxxx xxxx	uuuu uuuu
14h	SSPCON	WCOL	SSPOV	SSPEN	CKP	SSPM3	SSPM2	SSPM1	SSPM0	0000 0000	0000 0000
85h	TRISA	—	—	PORTA Data Direction Register						--11 1111	--11 1111
94h	SSPSTAT	SMP	CKE	D/$\overline{A}$	P	S	R/$\overline{W}$	UA	BF	0000 0000	0000 0000

Legend: x = unknown, u = unchanged, - = unimplemented read as '0'. Shaded cells are not used by the SSP in SPI mode.
Note 1: Always maintain these bits clear.

 © 1998-2013 Microchip Technology Inc.

8.4 SSP I²C Operation

The SSP module in I²C mode fully implements all slave functions, except general call support, and provides interrupts on start and stop bits in hardware to facilitate firmware implementations of the master functions. The SSP module implements the standard mode specifications as well as 7-bit and 10-bit addressing.

Two pins are used for data transfer. These are the RC3/SCK/SCL pin, which is the clock (SCL), and the RC4/SDI/SDA pin, which is the data (SDA). The user must configure these pins as inputs or outputs through the TRISC<4:3> bits.

The SSP module functions are enabled by setting SSP Enable bit SSPEN (SSPCON<5>).

FIGURE 8-7: SSP BLOCK DIAGRAM (I²C MODE)

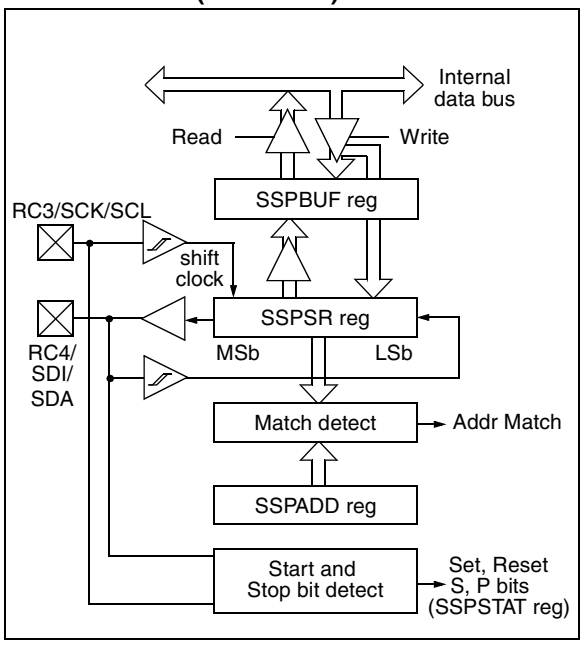

The SSP module has five registers for I²C operation. These are the:

- SSP Control Register (SSPCON)
- SSP Status Register (SSPSTAT)
- Serial Receive/Transmit Buffer (SSPBUF)
- SSP Shift Register (SSPSR) - Not directly accessible
- SSP Address Register (SSPADD)

The SSPCON register allows control of the I²C operation. Four mode selection bits (SSPCON<3:0>) allow one of the following I²C modes to be selected:

- I²C Slave mode (7-bit address)
- I²C Slave mode (10-bit address)
- I²C Slave mode (7-bit address), with start and stop bit interrupts enabled
- I²C Slave mode (10-bit address), with start and stop bit interrupts enabled
- I²C Firmware controlled master operation, slave is idle

Selection of any I²C mode, with the SSPEN bit set, forces the SCL and SDA pins to be open drain, provided these pins are programmed to inputs by setting the appropriate TRISC bits.

Additional information on SSP I²C operation may be found in the PIC® Mid-Range MCU Reference Manual, DS33023.

8.4.1 SLAVE MODE

In slave mode, the SCL and SDA pins must be configured as inputs (TRISC<4:3> set). The SSP module will override the input state with the output data when required (slave-transmitter).

When an address is matched or the data transfer after an address match is received, the hardware automatically will generate the acknowledge ($\overline{ACK}$) pulse, and then load the SSPBUF register with the received value currently in the SSPSR register.

There are certain conditions that will cause the SSP module not to give this $\overline{ACK}$ pulse. These are if either (or both):

a) The buffer full bit BF (SSPSTAT<0>) was set before the transfer was received.

b) The overflow bit SSPOV (SSPCON<6>) was set before the transfer was received.

In this case, the SSPSR register value is not loaded into the SSPBUF, but bit SSPIF (PIR1<3>) is set. Table 8-3 shows what happens when a data transfer byte is received, given the status of bits BF and SSPOV. The shaded cells show the condition where user software did not properly clear the overflow condition. Flag bit BF is cleared by reading the SSPBUF register while bit SSPOV is cleared through software.

The SCL clock input must have a minimum high and low for proper operation. The high and low times of the I²C specification as well as the requirement of the SSP module is shown in timing parameter #100 and parameter #101.

8.4.1.1 ADDRESSING

Once the SSP module has been enabled, it waits for a START condition to occur. Following the START condition, the 8-bits are shifted into the SSPSR register. All incoming bits are sampled with the rising edge of the clock (SCL) line. The value of register SSPSR<7:1> is compared to the value of the SSPADD register. The address is compared on the falling edge of the eighth clock (SCL) pulse. If the addresses match, and the BF and SSPOV bits are clear, the following events occur:

a) The SSPSR register value is loaded into the SSPBUF register.
b) The buffer full bit, BF is set.
c) An $\overline{ACK}$ pulse is generated.
d) SSP interrupt flag bit, SSPIF (PIR1<3>) is set (interrupt is generated if enabled) - on the falling edge of the ninth SCL pulse.

In 10-bit address mode, two address bytes need to be received by the slave. The five Most Significant bits (MSbs) of the first address byte specify if this is a 10-bit address. Bit R/$\overline{W}$ (SSPSTAT<2>) must specify a write so the slave device will receive the second address byte. For a 10-bit address the first byte would equal '`1111 0 A9 A8 0`', where A9 and A8 are the two MSbs of the address. The sequence of events for 10-bit address is as follows, with steps 7- 9 for slave-transmitter:

1. Receive first (high) byte of Address (bits SSPIF, BF, and bit UA (SSPSTAT<1>) are set).
2. Update the SSPADD register with second (low) byte of Address (clears bit UA and releases the SCL line).
3. Read the SSPBUF register (clears bit BF) and clear flag bit SSPIF.
4. Receive second (low) byte of Address (bits SSPIF, BF, and UA are set).
5. Update the SSPADD register with the first (high) byte of Address, if match releases SCL line, this will clear bit UA.
6. Read the SSPBUF register (clears bit BF) and clear flag bit SSPIF.
7. Receive repeated START condition.
8. Receive first (high) byte of Address (bits SSPIF and BF are set).
9. Read the SSPBUF register (clears bit BF) and clear flag bit SSPIF.

TABLE 8-3 DATA TRANSFER RECEIVED BYTE ACTIONS

Status Bits as Data Transfer is Received				
BF	**SSPOV**	**SSPSR → SSPBUF**	**Generate $\overline{ACK}$ Pulse**	**Set bit SSPIF (SSP Interrupt occurs if enabled)**
0	0	Yes	Yes	Yes
1	0	No	No	Yes
1	1	No	No	Yes
0	1	No	No	Yes

 © 1998-2013 Microchip Technology Inc.

8.4.1.2 RECEPTION

When the R/$\overline{W}$ bit of the address byte is clear and an address match occurs, the R/$\overline{W}$ bit of the SSPSTAT register is cleared. The received address is loaded into the SSPBUF register.

When the address byte overflow condition exists, then no acknowledge ($\overline{ACK}$) pulse is given. An overflow condition is defined as either bit BF (SSPSTAT<0>) is set or bit SSPOV (SSPCON<6>) is set.

An SSP interrupt is generated for each data transfer byte. Flag bit SSPIF (PIR1<3>) must be cleared in software. The SSPSTAT register is used to determine the status of the byte.

FIGURE 8-8: I^{2}C WAVEFORMS FOR RECEPTION (7-BIT ADDRESS)

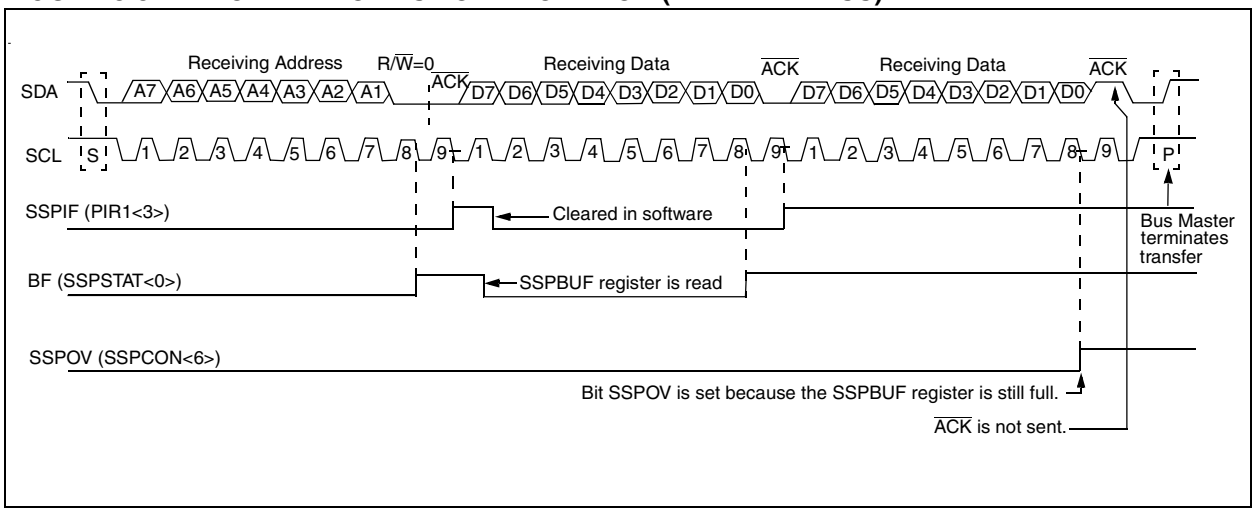

8.4.1.3 TRANSMISSION

When the R/$\overline{W}$ bit of the incoming address byte is set and an address match occurs, the R/$\overline{W}$ bit of the SSPSTAT register is set. The received address is loaded into the SSPBUF register. The $\overline{ACK}$ pulse will be sent on the ninth bit, and pin RC3/SCK/SCL is held low. The transmit data must be loaded into the SSPBUF register, which also loads the SSPSR register. Then pin RC3/SCK/SCL should be enabled by setting bit CKP (SSPCON<4>). The master must monitor the SCL pin prior to asserting another clock pulse. The slave devices may be holding off the master by stretching the clock. The eight data bits are shifted out on the falling edge of the SCL input. This ensures that the SDA signal is valid during the SCL high time (Figure 8-9).

An SSP interrupt is generated for each data transfer byte. Flag bit SSPIF must be cleared in software, and the SSPSTAT register is used to determine the status of the byte. Flag bit SSPIF is set on the falling edge of the ninth clock pulse.

As a slave-transmitter, the $\overline{ACK}$ pulse from the master-receiver is latched on the rising edge of the ninth SCL input pulse. If the SDA line was high (not $\overline{ACK}$), then the data transfer is complete. When the $\overline{ACK}$ is latched by the slave, the slave logic is reset (resets SSPSTAT register) and the slave then monitors for another occurrence of the START bit. If the SDA line was low ($\overline{ACK}$), the transmit data must be loaded into the SSPBUF register, which also loads the SSPSR register. Then pin RC3/SCK/SCL should be enabled by setting bit CKP.

FIGURE 8-9: I^{2}C WAVEFORMS FOR TRANSMISSION (7-BIT ADDRESS)

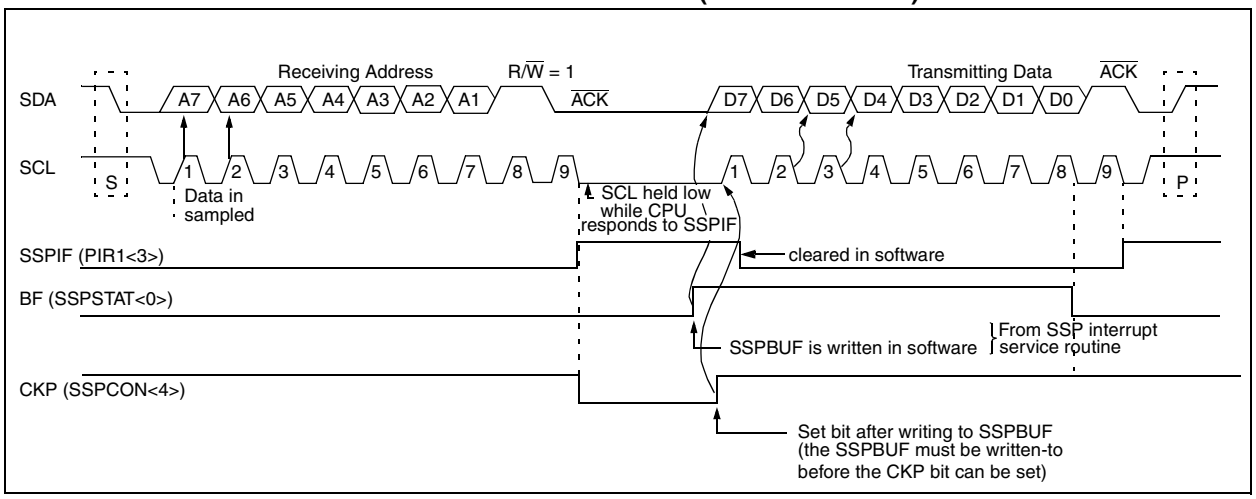

 © 1998-2013 Microchip Technology Inc.

8.4.2 MASTER OPERATION

Master operation is supported in firmware using interrupt generation on the detection of the START and STOP conditions. The STOP (P) and START (S) bits are cleared from a reset or when the SSP module is disabled. The STOP (P) and START (S) bits will toggle based on the START and STOP conditions. Control of the I^2C bus may be taken when the P bit is set, or the bus is idle and both the S and P bits are clear.

In master operation, the SCL and SDA lines are manipulated in firmware by clearing the corresponding TRISC<4:3> bit(s). The output level is always low, irrespective of the value(s) in PORTC<4:3>. So when transmitting data, a '1' data bit must have the TRISC<4> bit set (input) and a '0' data bit must have the TRISC<4> bit cleared (output). The same scenario is true for the SCL line with the TRISC<3> bit.

The following events will cause SSP Interrupt Flag bit, SSPIF, to be set (SSP Interrupt if enabled):

- START condition
- STOP condition
- Data transfer byte transmitted/received

Master operation can be done with either the slave mode idle (SSPM3:SSPM0 = `1011`) or with the slave active. When both master operation and slave modes are used, the software needs to differentiate the source(s) of the interrupt.

For more information on master operation, see *AN554 - Software Implementation of I^2C Bus Master.*

8.4.3 MULTI-MASTER OPERATION

In multi-master operation, the interrupt generation on the detection of the START and STOP conditions allows the determination of when the bus is free. The STOP (P) and START (S) bits are cleared from a reset or when the SSP module is disabled. The STOP (P) and START (S) bits will toggle based on the START and STOP conditions. Control of the I^2C bus may be taken when bit P (SSPSTAT<4>) is set, or the bus is idle and both the S and P bits clear. When the bus is busy, enabling the SSP Interrupt will generate the interrupt when the STOP condition occurs.

In multi-master operation, the SDA line must be monitored to see if the signal level is the expected output level. This check only needs to be done when a high level is output. If a high level is expected and a low level is present, the device needs to release the SDA and SCL lines (set TRISC<4:3>). There are two stages where this arbitration can be lost, these are:

- Address Transfer
- Data Transfer

When the slave logic is enabled, the slave continues to receive. If arbitration was lost during the address transfer stage, communication to the device may be in progress. If addressed an $\overline{ACK}$ pulse will be generated. If arbitration was lost during the data transfer stage, the device will need to re-transfer the data at a later time.

For more information on master operation, see *AN578 - Use of the SSP Module in the of I^2C Multi-Master Environment.*

TABLE 8-4 REGISTERS ASSOCIATED WITH I^2C OPERATION

Address	Name	Bit 7	Bit 6	Bit 5	Bit 4	Bit 3	Bit 2	Bit 1	Bit 0	Value on POR, BOR	Value on all other resets
0Bh, 8Bh, 10Bh,18Bh	INTCON	GIE	PEIE	T0IE	INTE	RBIE	T0IF	INTF	RBIF	0000 000x	0000 000u
0Ch	PIR1	(1)	ADIF	(1)	(1)	SSPIF	CCP1IF	TMR2IF	TMR1IF	0000 0000	0000 0000
8Ch	PIE1	(1)	ADIE	(1)	(1)	SSPIE	CCP1IE	TMR2IE	TMR1IE	0000 0000	0000 0000
13h	SSPBUF	Synchronous Serial Port Receive Buffer/Transmit Register								xxxx xxxx	uuuu uuuu
93h	SSPADD	Synchronous Serial Port (I^2C mode) Address Register								0000 0000	0000 0000
14h	SSPCON	WCOL	SSPOV	SSPEN	CKP	SSPM3	SSPM2	SSPM1	SSPM0	0000 0000	0000 0000
94h	SSPSTAT	SMP(2)	CKE(2)	D/$\overline{A}$	P	S	R/$\overline{W}$	UA	BF	0000 0000	0000 0000
87h	TRISC	PORTC Data Direction register								1111 1111	1111 1111

Legend: x = unknown, u = unchanged, - = unimplemented locations read as '0'.
Shaded cells are not used by SSP module in SPI mode.

Note 1: These bits are unimplemented, read as '0'.
2: The SMP and CKE bits are implemented on the PIC16CR72 only. On the PIC16C72, these two bits are unimplemented, read as '0'.

NOTES:

 © 1998-2013 Microchip Technology Inc.

9.0 ANALOG-TO-DIGITAL CONVERTER (A/D) MODULE

The analog-to-digital (A/D) converter module has five inputs for the PIC16C72/R72.

The A/D allows conversion of an analog input signal to a corresponding 8-bit digital number (refer to Application Note AN546 for use of A/D Converter). The output of the sample and hold is the input into the converter, which generates the result via successive approximation. The analog reference voltage is software selectable to either the device's positive supply voltage (V_{DD}) or the voltage level on the RA3/AN3/V_{REF} pin.

The A/D converter has a unique feature of being able to operate while the device is in SLEEP mode. To operate in sleep, the A/D conversion clock must be derived from the A/D's internal RC oscillator.

Additional information on the A/D module is available in the PIC® Mid-Range MCU Reference Manual, DS33023.

The A/D module has three registers. These registers are:

- A/D Result Register (ADRES)
- A/D Control Register 0 (ADCON0)
- A/D Control Register 1 (ADCON1)

A device reset forces all registers to their reset state. This forces the A/D module to be turned off, and any conversion is aborted.

The ADCON0 register, shown in Figure 9-1, controls the operation of the A/D module. The ADCON1 register, shown in Figure 9-2, configures the functions of the port pins. The port pins can be configured as analog inputs (RA3 can also be a voltage reference) or as digital I/O.

FIGURE 9-1: ADCON0 REGISTER (ADDRESS 1Fh)

R/W-0	R/W-0	R/W-0	R/W-0	R/W-0	R/W-0	U-0	R/W-0
ADCS1	ADCS0	CHS2	CHS1	CHS0	GO/$\overline{\text{DONE}}$	—	ADON
bit7							bit0

R = Readable bit
W = Writable bit
U = Unimplemented bit, read as '0'
- n = Value at POR reset

bit 7-6: **ADCS1:ADCS0:** A/D Conversion Clock Select bits
00 = F_{OSC}/2
01 = F_{OSC}/8
10 = F_{OSC}/32
11 = F_{RC} (clock derived from an internal RC oscillator)

bit 5-3: **CHS2:CHS0**: Analog Channel Select bits
000 = channel 0, (RA0/AN0)
001 = channel 1, (RA1/AN1)
010 = channel 2, (RA2/AN2)
011 = channel 3, (RA3/AN3)
100 = channel 4, (RA5/AN4)

bit 2: **GO/$\overline{\text{DONE}}$:** A/D Conversion Status bit

If ADON = 1
1 = A/D conversion in progress (setting this bit starts the A/D conversion)
0 = A/D conversion not in progress (This bit is automatically cleared by hardware when the A/D conversion is complete)

bit 1: **Unimplemented**: Read as '0'

bit 0: **ADON**: A/D On bit
1 = A/D converter module is operating
0 = A/D converter module is shutoff and consumes no operating current

FIGURE 9-2: ADCON1 REGISTER (ADDRESS 9Fh)

U-0	U-0	U-0	U-0	U-0	R/W-0	R/W-0	R/W-0
—	—	—	—	—	PCFG2	PCFG1	PCFG0
bit7							bit0

R = Readable bit
W = Writable bit
U = Unimplemented bit, read as ‘0’
- n = Value at POR reset

bit 7-3: **Unimplemented:** Read as '0'

bit 2-0: **PCFG2:PCFG0**: A/D Port Configuration Control bits

PCFG2:PCFG0	RA0	RA1	RA2	RA5	RA3	VREF
000	A	A	A	A	A	VDD
001	A	A	A	A	VREF	RA3
010	A	A	A	A	A	VDD
011	A	A	A	A	VREF	RA3
100	A	A	D	D	A	VDD
101	A	A	D	D	VREF	RA3
11x	D	D	D	D	D	GND

A = Analog input

D = Digital I/O

 © 1998-2013 Microchip Technology Inc.

The ADRES register contains the result of the A/D conversion. When the A/D conversion is complete, the result is loaded into the ADRES register, the GO/$\overline{\text{DONE}}$ bit (ADCON0<2>) is cleared, and A/D interrupt flag bit ADIF is set. The block diagram of the A/D module is shown in Figure 9-3.

The value that is in the ADRES register is not modified for a Power-on Reset. The ADRES register will contain unknown data after a Power-on Reset.

After the A/D module has been configured as desired, the selected channel must be acquired before the conversion is started. The analog input channels must have their corresponding TRIS bits selected as an input. To determine acquisition time, see Section 9.1. After this acquisition time has elapsed the A/D conversion can be started. The following steps should be followed for doing an A/D conversion:

1. Configure the A/D module:
   - Configure analog pins / voltage reference / and digital I/O (ADCON1)
   - Select A/D input channel (ADCON0)
   - Select A/D conversion clock (ADCON0)
   - Turn on A/D module (ADCON0)
2. Configure A/D interrupt (if desired):
   - Clear ADIF bit
   - Set ADIE bit
   - Set GIE bit
3. Wait the required acquisition time.
4. Start conversion:
   - Set GO/$\overline{\text{DONE}}$ bit (ADCON0)
5. Wait for A/D conversion to complete, by either:
   - Polling for the GO/$\overline{\text{DONE}}$ bit to be cleared

   OR
   - Waiting for the A/D interrupt
6. Read A/D Result register (ADRES), clear bit ADIF if required.
7. For next conversion, go to step 1 or step 2 as required. The A/D conversion time per bit is defined as T_{AD}. A minimum wait of $2T_{AD}$ is required before next acquisition starts.

FIGURE 9-3: A/D BLOCK DIAGRAM

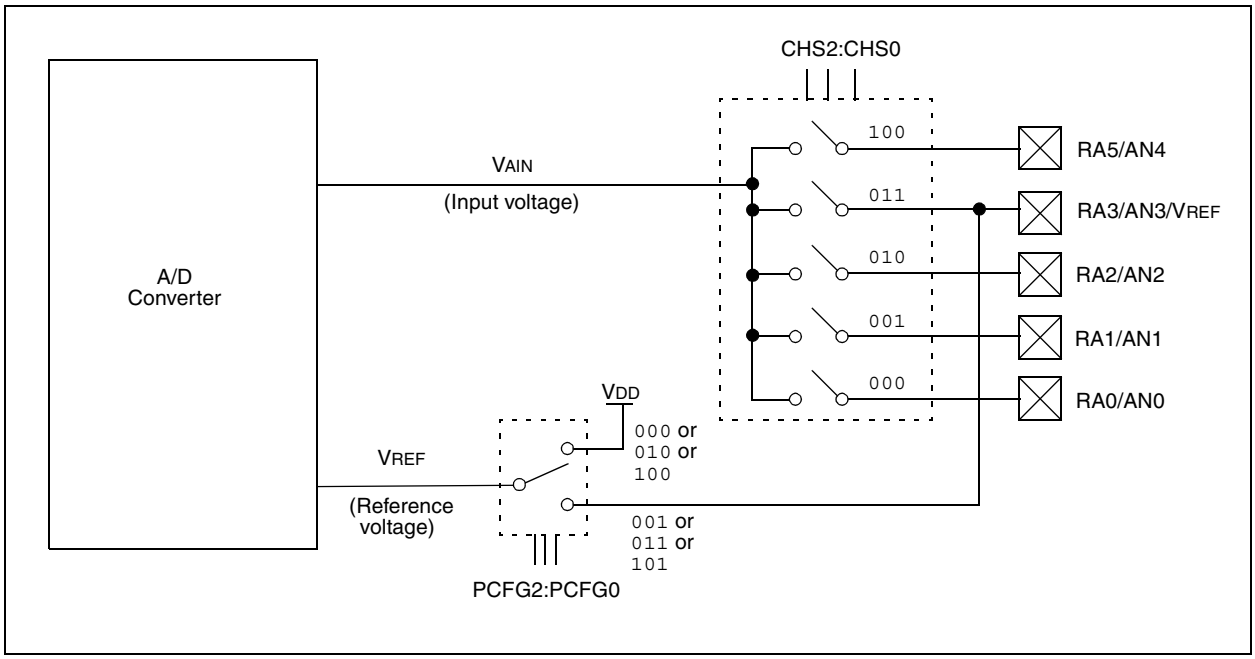

9.1 A/D Acquisition Requirements

For the A/D converter to meet its specified accuracy, the charge holding capacitor (CHOLD) must be allowed to fully charge to the input channel voltage level. The analog input model is shown in Figure 9-4. The source impedance (RS) and the internal sampling switch (RSS) impedance directly affect the time required to charge the capacitor CHOLD. The sampling switch (RSS) impedance varies over the device voltage (VDD). The source impedance affects the offset voltage at the analog input (due to pin leakage current). **The maximum recommended impedance for analog sources is 10 kΩ.** After the analog input channel is selected (changed) this acquisition must be done before the conversion can be started.

To calculate the minimum acquisition time, TACQ, see the PIC® Mid-Range MCU Reference Manual, DS33023. This equation calculates the acquisition time to within 1/2 LSb error (512 steps for the A/D). The 1/2 LSb error is the maximum error allowed for the A/D to meet its specified accuracy.

FIGURE 9-4: ANALOG INPUT MODEL

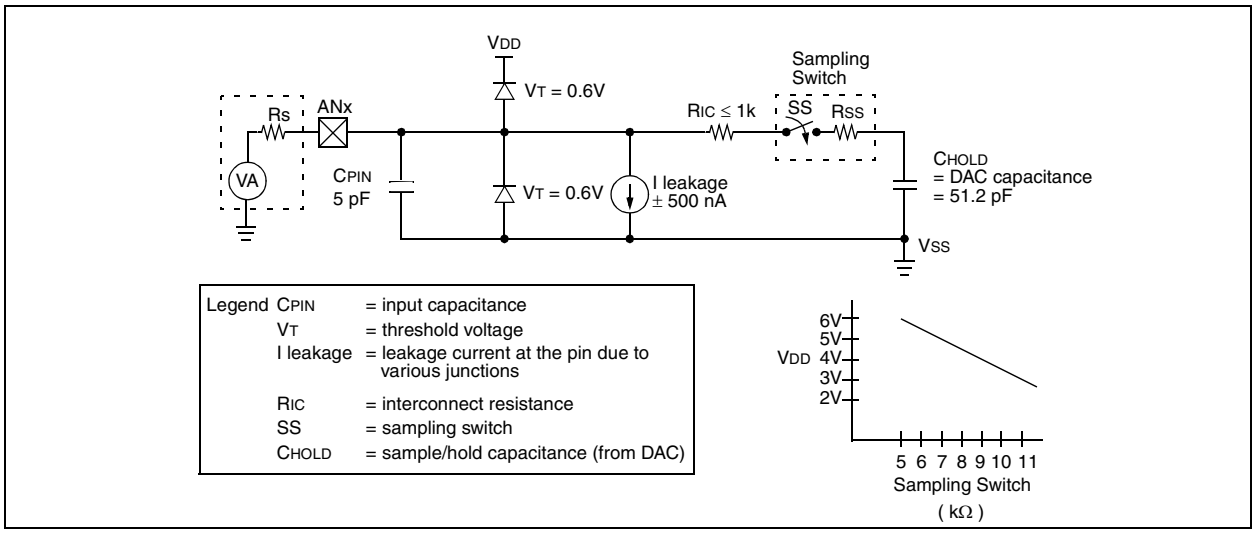

 © 1998-2013 Microchip Technology Inc.

9.2 Selecting the A/D Conversion Clock

The A/D conversion time per bit is defined as TAD. The A/D conversion requires 9.5TAD per 8-bit conversion. The source of the A/D conversion clock is software selectable. The four possible options for TAD are:

- 2TOSC
- 8TOSC
- 32TOSC
- Internal RC oscillator

For correct A/D conversions, the A/D conversion clock (TAD) must be selected to ensure a minimum TAD time of 1.6 μs.

Table 9-1 shows the resultant TAD times derived from the device operating frequencies and the A/D clock source selected.

9.3 Configuring Analog Port Pins

The ADCON1, TRISA, and TRISE registers control the operation of the A/D port pins. The port pins that are desired as analog inputs must have their corresponding TRIS bits set (input). If the TRIS bit is cleared (output), the digital output level (VOH or VOL) will be converted.

The A/D operation is independent of the state of the CHS2:CHS0 bits and the TRIS bits.

Note 1: When reading the port register, all pins configured as analog input channels will read as cleared (a low level). Pins configured as digital inputs, will convert an analog input. Analog levels on a digitally configured input will not affect the conversion accuracy.

Note 2: Analog levels on any pin that is defined as a digital input (including the AN4:AN0 pins), may cause the input buffer to consume current that is out of the devices specification.

TABLE 9-1 TAD vs. DEVICE OPERATING FREQUENCIES

AD Clock Source (TAD)		Device Frequency			
Operation	**ADCS1:ADCS0**	**20 MHz**	**5 MHz**	**1.25 MHz**	**333.33 kHz**
2TOSC	00	100 ns(2)	400 ns(2)	1.6 μs	6 μs
8TOSC	01	400 ns(2)	1.6 μs	6.4 μs	24 μs(3)
32TOSC	10	1.6 μs	6.4 μs	25.6 μs(3)	96 μs(3)
RC(5)	11	2 - 6 μs(1,4)	2 - 6 μs(1,4)	2 - 6 μs(1,4)	2 - 6 μs(1)

Legend: Shaded cells are outside of recommended range.
Note 1: The RC source has a typical TAD time of 4 μs.
2: These values violate the minimum required TAD time.
3: For faster conversion times, the selection of another clock source is recommended.
4: When device frequency is greater than 1 MHz, the RC A/D conversion clock source is recommended for sleep operation only.
5: For extended voltage devices (LC), please refer to Electrical Specifications section.

9.4 A/D Conversions

Note: The GO/$\overline{\text{DONE}}$ bit should **NOT** be set in the same instruction that turns on the A/D.

9.5 Use of the CCP Trigger

An A/D conversion can be started by the "special event trigger" of the CCP1 module. This requires that the CCP1M3:CCP1M0 bits (CCP1CON<3:0>) be programmed as `1011` and that the A/D module is enabled (ADON bit is set). When the trigger occurs, the GO/$\overline{\text{DONE}}$ bit will be set, starting the A/D conversion, and the Timer1 counter will be reset to zero. Timer1 is reset to automatically repeat the A/D acquisition period with minimal software overhead (moving the ADRES to the desired location). The appropriate analog input channel must be selected and the minimum acquisition done before the "special event trigger" sets the GO/$\overline{\text{DONE}}$ bit (starts a conversion).

If the A/D module is not enabled (ADON is cleared), then the "special event trigger" will be ignored by the A/D module, but will still reset the Timer1 counter.

TABLE 9-2 REGISTERS/BITS ASSOCIATED WITH A/D

Address	Name	Bit 7	Bit 6	Bit 5	Bit 4	Bit 3	Bit 2	Bit 1	Bit 0	Value on: POR, BOR	Value on all other Resets
0Bh,8Bh	INTCON	GIE	PEIE	T0IE	INTE	RBIE	T0IF	INTF	RBIF	`0000 000x`	`0000 000u`
0Ch	PIR1	—	ADIF	—	—	SSPIF	CCP1IF	TMR2IF	TMR1IF	`-0-- 0000`	`-0-- 0000`
8Ch	PIE1	—	ADIE	—	—	SSPIE	CCP1IE	TMR2IE	TMR1IE	`-0-- 0000`	`-0-- 0000`
1Eh	ADRES	A/D Result Register								`xxxx xxxx`	`uuuu uuuu`
1Fh	ADCON0	ADCS1	ADCS0	CHS2	CHS1	CHS0	GO/$\overline{\text{DONE}}$	—	ADON	`0000 00-0`	`0000 00-0`
9Fh	ADCON1	—	—	—	—	—	PCFG2	PCFG1	PCFG0	`---- -000`	`---- -000`
05h	PORTA	—	—	RA5	RA4	RA3	RA2	RA1	RA0	`--0x 0000`	`--0u 0000`
85h	TRISA	—	—	PORTA Data Direction Register						`--11 1111`	`--11 1111`

Legend: `x` = unknown, `u` = unchanged, `-` = unimplemented read as '0'. Shaded cells are not used for A/D conversion.

 © 1998-2013 Microchip Technology Inc.

10.0 SPECIAL FEATURES OF THE CPU

The PIC16C72 series has a host of such features intended to maximize system reliability, minimize cost through elimination of external components, provide power saving operating modes and offer code protection. These are:

- Oscillator selection
- Reset
  - Power-on Reset (POR)
  - Power-up Timer (PWRT)
  - Oscillator Start-up Timer (OST)
  - Brown-out Reset (BOR)
- Interrupts
- Watchdog Timer (WDT)
- SLEEP
- Code protection
- ID locations
- In-Circuit Serial Programming™

The PIC16CXXX family has a Watchdog Timer which can be shut off only through configuration bits. It runs off its own RC oscillator for added reliability. There are two timers that offer necessary delays on power-up. One is the Oscillator Start-up Timer (OST), intended to keep the chip in reset until the crystal oscillator is stable. The other is the Power-up Timer (PWRT), which provides a fixed delay of 72 ms (nominal) on power-up only, designed to keep the part in reset while the power supply stabilizes. With these two timers on-chip, most applications need no external reset circuitry.

SLEEP mode is designed to offer a very low current power-down mode. The user can wake-up from SLEEP through external reset, Watchdog Timer Wake-up, or through an interrupt. Several oscillator options are also made available to allow the part to fit the application. The RC oscillator option saves system cost while the LP crystal option saves power. A set of configuration bits are used to select various options.

Additional information on special features is available in the PIC® Mid-Range MCU Family Reference Manual, DS33023.

10.1 Configuration Bits

The configuration bits can be programmed (read as '0') or left unprogrammed (read as '1') to select various device configurations. These bits are mapped in program memory location 2007h.

The user will note that address 2007h is beyond the user program memory space. In fact, it belongs to the special test/configuration memory space (2000h - 3FFFh), which can be accessed only during programming.

FIGURE 10-1: CONFIGURATION WORD FOR PIC16C72/R72

CP1	CP0	CP1	$\overline{CP0}$	$\overline{CP1}$	CP0	—	BODEN	CP1	CP0	$\overline{PWRTE}$	WDTE	FOSC1	FOSC0
bit13													bit0

Register:CONFIG
Address2007h

bit 13-8 5-4: **CP1:CP0**: Code Protection bits (2)
- 11 = Code protection off
- 10 = Upper half of program memory code protected
- 01 = Upper 3/4th of program memory code protected
- 00 = All memory is code protected

bit 7: **Unimplemented**: Read as '1'

bit 6: **BODEN**: Brown-out Reset Enable bit (1)
- 1 = BOR enabled
- 0 = BOR disabled

bit 3: **PWRTE**: Power-up Timer Enable bit (1)
- 1 = PWRT disabled
- 0 = PWRT enabled

bit 2: **WDTE**: Watchdog Timer Enable bit
- 1 = WDT enabled
- 0 = WDT disabled

bit 1-0: **FOSC1:FOSC0**: Oscillator Selection bits
- 11 = RC oscillator
- 10 = HS oscillator
- 01 = XT oscillator
- 00 = LP oscillator

Note 1: Enabling Brown-out Reset automatically enables Power-up Timer (PWRT) regardless of the value of bit $\overline{PWRTE}$. Ensure the Power-up Timer is enabled anytime Brown-out Reset is enabled.

2: All of the CP1:CP0 pairs have to be given the same value to enable the code protection scheme listed.

10.2 Oscillator Configurations

10.2.1 OSCILLATOR TYPES

The PIC16CXXX family can be operated in four different oscillator modes. The user can program two configuration bits (FOSC1 and FOSC0) to select one of these four modes:

- LP Low Power Crystal
- XT Crystal/Resonator
- HS High Speed Crystal/Resonator
- RC Resistor/Capacitor

10.2.2 CRYSTAL OSCILLATOR/CERAMIC RESONATORS

In XT, LP or HS modes a crystal or ceramic resonator is connected to the OSC1/CLKIN and OSC2/CLKOUT pins to establish oscillation (Figure 10-2). The PIC16CXXX family oscillator design requires the use of a parallel cut crystal. Use of a series cut crystal may give a frequency out of the crystal manufacturers specifications. When in XT, LP or HS modes, the device can have an external clock source to drive the OSC1/CLKIN pin (Figure 10-3).

FIGURE 10-2: CRYSTAL/CERAMIC RESONATOR OPERATION (HS, XT OR LP OSC CONFIGURATION)

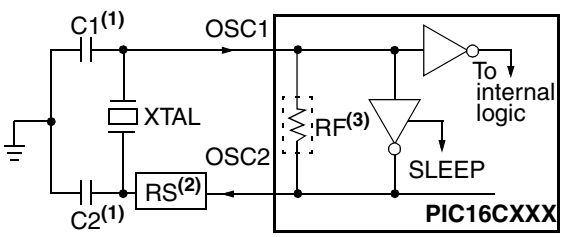

Note1: See Table 10-1 and Table 10-2 for recommended values of C1 and C2.
2: A series resistor (RS) may be required for AT strip cut crystals.
3: RF varies with the crystal chosen.

FIGURE 10-3: EXTERNAL CLOCK INPUT OPERATION (HS, XT OR LP OSC CONFIGURATION)

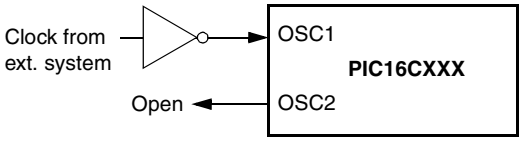

TABLE 10-1 CERAMIC RESONATORS

Ranges Tested:			
Mode	**Freq**	**OSC1**	**OSC2**
XT	455 kHz 2.0 MHz 4.0 MHz	68 - 100 pF 15 - 68 pF 15 - 68 pF	68 - 100 pF 15 - 68 pF 15 - 68 pF
HS	8.0 MHz 16.0 MHz	10 - 68 pF 10 - 22 pF	10 - 68 pF 10 - 22 pF
These values are for design guidance only. See notes at bottom of page.			
Resonators Used:			
455 kHz	Panasonic EFO-A455K04B	± 0.3%	
2.0 MHz	Murata Erie CSA2.00MG	± 0.5%	
4.0 MHz	Murata Erie CSA4.00MG	± 0.5%	
8.0 MHz	Murata Erie CSA8.00MT	± 0.5%	
16.0 MHz	Murata Erie CSA16.00MX	± 0.5%	
All resonators used did not have built-in capacitors.			

TABLE 10-2 CAPACITOR SELECTION FOR CRYSTAL OSCILLATOR

Osc Type	Crystal Freq	Cap. Range C1	Cap. Range C2
LP	32 kHz	33 pF	33 pF
	200 kHz	15 pF	15 pF
XT	200 kHz	47-68 pF	47-68 pF
	1 MHz	15 pF	15 pF
	4 MHz	15 pF	15 pF
HS	4 MHz	15 pF	15 pF
	8 MHz	15-33 pF	15-33 pF
	20 MHz	15-33 pF	15-33 pF
These values are for design guidance only. See notes at bottom of page.			
Crystals Used			
32 kHz	Epson C-001R32.768K-A	± 20 PPM	
200 kHz	STD XTL 200.000KHz	± 20 PPM	
1 MHz	ECS ECS-10-13-1	± 50 PPM	
4 MHz	ECS ECS-40-20-1	± 50 PPM	
8 MHz	EPSON CA-301 8.000M-C	± 30 PPM	
20 MHz	EPSON CA-301 20.000M-C	± 30 PPM	

Note 1: Recommended values of C1 and C2 are identical to the ranges tested (Table 10-1).
2: Higher capacitance increases the stability of oscillator but also increases the start-up time.
3: Since each resonator/crystal has its own characteristics, the user should consult the resonator/crystal manufacturer for appropriate values of external components.
4: Rs may be required in HS mode as well as XT mode to avoid overdriving crystals with low drive level specification.

 © 1998-2013 Microchip Technology Inc.

10.2.3 RC OSCILLATOR

For timing insensitive applications the “RC” device option offers additional cost savings. The RC oscillator frequency is a function of the supply voltage, the resistor (REXT) and capacitor (CEXT) values, and the operating temperature. In addition to this, the oscillator frequency will vary from unit to unit due to normal process parameter variation. Furthermore, the difference in lead frame capacitance between package types will also affect the oscillation frequency, especially for low CEXT values. The user also needs to take into account variation due to tolerance of external R and C components used. Figure 10-4 shows how the R/C combination is connected to the PIC16CXXX family.

FIGURE 10-4: RC OSCILLATOR MODE

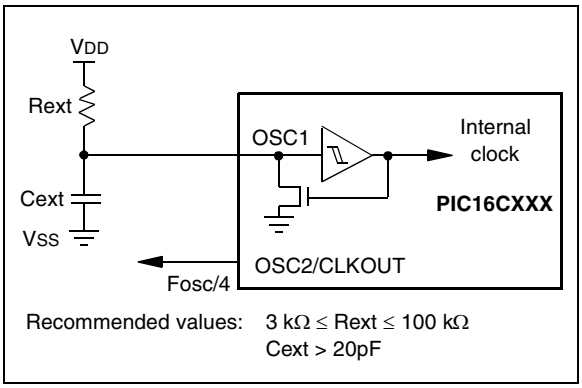

10.3 Reset

The PIC16CXXX family differentiates between various kinds of reset:

- Power-on Reset (POR)
- $\overline{\text{MCLR}}$ reset during normal operation
- $\overline{\text{MCLR}}$ reset during SLEEP
- WDT Reset (normal operation)
- Brown-out Reset (BOR)

Some registers are not affected in any reset condition; their status is unknown on POR and unchanged in any other reset. Most other registers are reset to a “reset state” on Power-on Reset (POR), on the $\overline{\text{MCLR}}$ and WDT Reset, on $\overline{\text{MCLR}}$ reset during SLEEP, and Brown-out Reset (BOR). They are not affected by a WDT Wake-up, which is viewed as the resumption of normal operation. The $\overline{\text{TO}}$ and $\overline{\text{PD}}$ bits are set or cleared differently in different reset situations as indicated in Table 10-4. These bits are used in software to determine the nature of the reset. See Table 10-6 for a full description of reset states of all registers.

A simplified block diagram of the on-chip reset circuit is shown in Figure 10-5.

The PIC16C72/CR72 have a $\overline{\text{MCLR}}$ noise filter in the $\overline{\text{MCLR}}$ reset path. The filter will detect and ignore small pulses.

It should be noted that a WDT Reset does not drive $\overline{\text{MCLR}}$ pin low.

FIGURE 10-5: SIMPLIFIED BLOCK DIAGRAM OF ON-CHIP RESET CIRCUIT

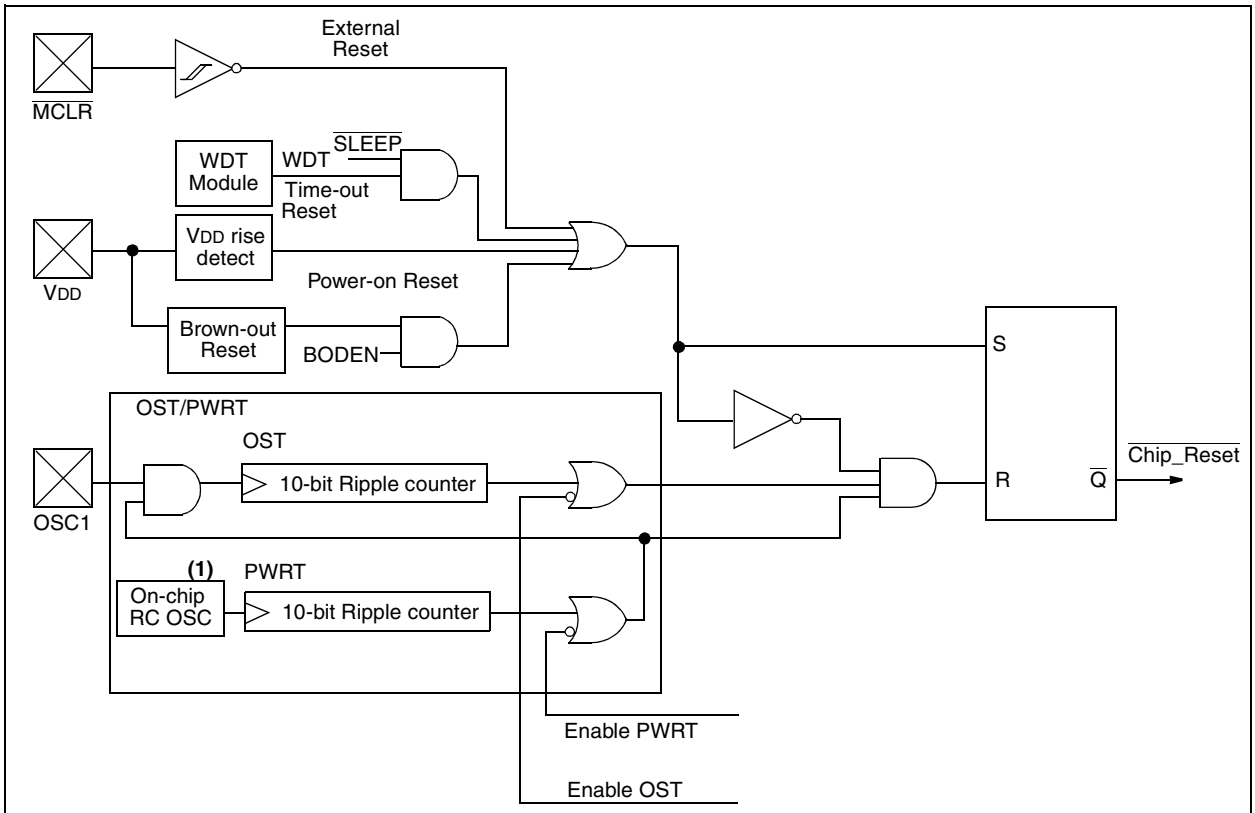

Note 1: This is a separate oscillator from the RC oscillator of the CLKIN pin.

 © 1998-2013 Microchip Technology Inc.

10.4 Power-On Reset (POR)

A Power-on Reset pulse is generated on-chip when VDD rise is detected (in the range of 1.5V - 2.1V). To take advantage of the POR, just tie the $\overline{\text{MCLR}}$ pin directly (or through a resistor) to VDD. This will eliminate external RC components usually needed to create a Power-on Reset. A maximum rise time for VDD is specified. See Electrical Specifications for details. For a slow rise time, see Figure 10-6.

When the device starts normal operation (exits the reset condition), device operating parameters (voltage, frequency, temperature,...) must be met to ensure operation. If these conditions are not met, the device must be held in reset until the operating conditions are met. Brown-out Reset may be used to meet the startup conditions.

FIGURE 10-6: EXTERNAL POWER-ON RESET CIRCUIT (FOR SLOW VDD POWER-UP)

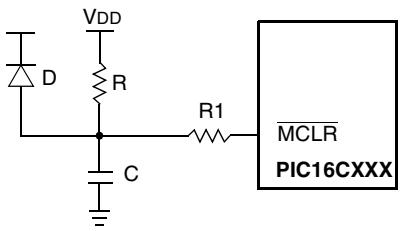

Note 1: External Power-on Reset circuit is required only if VDD power-up slope is too slow. The diode D helps discharge the capacitor quickly when VDD powers down.

2: R < 40 kΩ is recommended to make sure that voltage drop across R does not violate the device's electrical specification.

3: R1 = 100Ω to 1 kΩ will limit any current flowing into $\overline{\text{MCLR}}$ from external capacitor C in the event of $\overline{\text{MCLR}}$/VPP pin breakdown due to Electrostatic Discharge (ESD) or Electrical Overstress (EOS).

10.5 Power-up Timer (PWRT)

The Power-up Timer provides a fixed 72 ms nominal time-out on power-up only, from the POR. The Power-up Timer operates on an internal RC oscillator. The chip is kept in reset as long as the PWRT is active. The PWRT's time delay allows VDD to rise to an acceptable level. A configuration bit is provided to enable/disable the PWRT.

The power-up time delay will vary from chip to chip due to VDD, temperature, and process variation. See DC parameters for details.

10.6 Oscillator Start-up Timer (OST)

The Oscillator Start-up Timer (OST) provides 1024 oscillator cycle (from OSC1 input) delay after the PWRT delay is over. This ensures that the crystal oscillator or resonator has started and stabilized.

The OST time-out is invoked only for XT, LP and HS modes and only on Power-on Reset or wake-up from SLEEP.

10.7 Brown-Out Reset (BOR)

A configuration bit, BODEN, can disable (if clear/programmed) or enable (if set) the Brown-out Reset circuitry. If VDD falls below 4.0V (3.8V - 4.2V range) for greater than parameter #35, the brown-out situation will reset the chip. A reset may not occur if VDD falls below 4.0V for less than parameter #35. The chip will remain in Brown-out Reset until VDD rises above BVDD. The Power-up Timer will now be invoked and will keep the chip in RESET an additional 72 ms. If VDD drops below BVDD while the Power-up Timer is running, the chip will go back into a Brown-out Reset and the Power-up Timer will be initialized. Once VDD rises above BVDD, the Power-up Timer will execute a 72 ms time delay. The Power-up Timer should always be enabled when Brown-out Reset is enabled.

10.8 Time-out Sequence

On power-up the time-out sequence is as follows: First PWRT time-out is invoked after the POR time delay has expired. Then OST is activated. The total time-out will vary based on oscillator configuration and the status of the PWRT. For example, in RC mode with the PWRT disabled, there will be no time-out at all. Figure 10-7, Figure 10-8, Figure 10-9 and Figure 10-10 depict time-out sequences on power-up.

Since the time-outs occur from the POR pulse, if $\overline{\text{MCLR}}$ is kept low long enough, the time-outs will expire. Then bringing $\overline{\text{MCLR}}$ high will begin execution immediately (Figure 10-9). This is useful for testing purposes or to synchronize more than one PIC16CXXX family device operating in parallel.

Table 10-5 shows the reset conditions for some special function registers, while Table 10-6 shows the reset conditions for all the registers.

10.9 Power Control/Status Register (PCON)

The Power Control/Status Register, PCON has up to two bits, depending upon the device.

Bit0 is Brown-out Reset Status bit, $\overline{\text{BOR}}$. Bit $\overline{\text{BOR}}$ is unknown on a Power-on Reset. It must then be set by the user and checked on subsequent resets to see if bit $\overline{\text{BOR}}$ cleared, indicating a BOR occurred. The $\overline{\text{BOR}}$ bit is a "Don't Care" bit and is not necessarily predictable if the Brown-out Reset circuitry is disabled (by clearing bit BODEN in the Configuration Word).

Bit1 is $\overline{\text{POR}}$ (Power-on Reset Status bit). It is cleared on a Power-on Reset and unaffected otherwise. The user must set this bit following a Power-on Reset.

TABLE 10-3 TIME-OUT IN VARIOUS SITUATIONS

Oscillator Configuration	Power-up		Brown-out	Wake-up from SLEEP
	$\overline{\text{PWRTE}}$ = 0	$\overline{\text{PWRTE}}$ = 1		
XT, HS, LP	72 ms + 1024TOSC	1024TOSC	72 ms + 1024TOSC	1024TOSC
RC	72 ms	—	72 ms	—

TABLE 10-4 STATUS BITS AND THEIR SIGNIFICANCE

$\overline{\text{POR}}$	$\overline{\text{BOR}}$	$\overline{\text{TO}}$	$\overline{\text{PD}}$	
0	x	1	1	Power-on Reset
0	x	0	x	Illegal, $\overline{\text{TO}}$ is set on $\overline{\text{POR}}$
0	x	x	0	Illegal, $\overline{\text{PD}}$ is set on $\overline{\text{POR}}$
1	0	x	x	Brown-out Reset
1	1	0	1	WDT Reset
1	1	0	0	WDT Wake-up
1	1	u	u	$\overline{\text{MCLR}}$ Reset during normal operation
1	1	1	0	$\overline{\text{MCLR}}$ Reset during SLEEP or interrupt wake-up from SLEEP

TABLE 10-5 RESET CONDITION FOR SPECIAL REGISTERS

Condition	Program Counter	STATUS Register	PCON Register
Power-on Reset	000h	0001 1xxx	---- --0x
$\overline{\text{MCLR}}$ Reset during normal operation	000h	000u uuuu	---- --uu
$\overline{\text{MCLR}}$ Reset during SLEEP	000h	0001 0uuu	---- --uu
WDT Reset	000h	0000 1uuu	---- --uu
WDT Wake-up	PC + 1	uuu0 0uuu	---- --uu
Brown-out Reset	000h	0001 1uuu	---- --u0
Interrupt wake-up from SLEEP	PC + 1(1)	uuu1 0uuu	---- --uu

Legend: u = unchanged, x = unknown, - = unimplemented bit read as '0'.
Note 1: When the wake-up is due to an interrupt and the GIE bit is set, the PC is loaded with the interrupt vector (0004h).

 © 1998-2013 Microchip Technology Inc.

TABLE 10-6 INITIALIZATION CONDITIONS FOR ALL REGISTERS

Register	Power-on Reset, Brown-out Reset	$\overline{\text{MCLR}}$ Resets WDT Reset	Wake-up via WDT or Interrupt
W	xxxx xxxx	uuuu uuuu	uuuu uuuu
INDF	N/A	N/A	N/A
TMR0	xxxx xxxx	uuuu uuuu	uuuu uuuu
PCL	0000h	0000h	PC + 1(2)
STATUS	0001 1xxx	000q quuu(3)	uuuq quuu(3)
FSR	xxxx xxxx	uuuu uuuu	uuuu uuuu
PORTA	--0x 0000	--0u 0000	--uu uuuu
PORTB	xxxx xxxx	uuuu uuuu	uuuu uuuu
PORTC	xxxx xxxx	uuuu uuuu	uuuu uuuu
PCLATH	---0 0000	---0 0000	---u uuuu
INTCON	0000 000x	0000 000u	uuuu uuuu(1)
PIR1	-0-- 0000	-0-- 0000	-u-- uuuu(1)
TMR1L	xxxx xxxx	uuuu uuuu	uuuu uuuu
TMR1H	xxxx xxxx	uuuu uuuu	uuuu uuuu
T1CON	--00 0000	--uu uuuu	--uu uuuu
TMR2	0000 0000	0000 0000	uuuu uuuu
T2CON	-000 0000	-000 0000	-uuu uuuu
SSPBUF	xxxx xxxx	uuuu uuuu	uuuu uuuu
SSPCON	0000 0000	0000 0000	uuuu uuuu
CCPR1L	xxxx xxxx	uuuu uuuu	uuuu uuuu
CCPR1H	xxxx xxxx	uuuu uuuu	uuuu uuuu
CCP1CON	--00 0000	--00 0000	--uu uuuu
ADRES	xxxx xxxx	uuuu uuuu	uuuu uuuu
ADCON0	0000 00-0	0000 00-0	uuuu uu-u
OPTION	1111 1111	1111 1111	uuuu uuuu
TRISA	--11 1111	--11 1111	--uu uuuu
TRISB	1111 1111	1111 1111	uuuu uuuu
TRISC	1111 1111	1111 1111	uuuu uuuu
PIE1	-0-- 0000	-0-- 0000	-u-- uuuu
PCON	---- --0u	---- --uu	---- --uu
PR2	1111 1111	1111 1111	1111 1111
SSPADD	0000 0000	0000 0000	uuuu uuuu
SSPSTAT	--00 0000	--00 0000	--uu uuuu
ADCON1	---- -000	---- -000	---- -uuu

Legend: u = unchanged, x = unknown, - = unimplemented bit, read as '0', q = value depends on condition

Note 1: One or more bits in INTCON, PIR1 and/or PIR2 will be affected (to cause wake-up).

2: When the wake-up is due to an interrupt and the GIE bit is set, the PC is loaded with the interrupt vector (0004h).

3: See Table 10-5 for reset value for specific condition.

FIGURE 10-7: TIME-OUT SEQUENCE ON POWER-UP ($\overline{MCLR}$ TIED TO V_{DD})

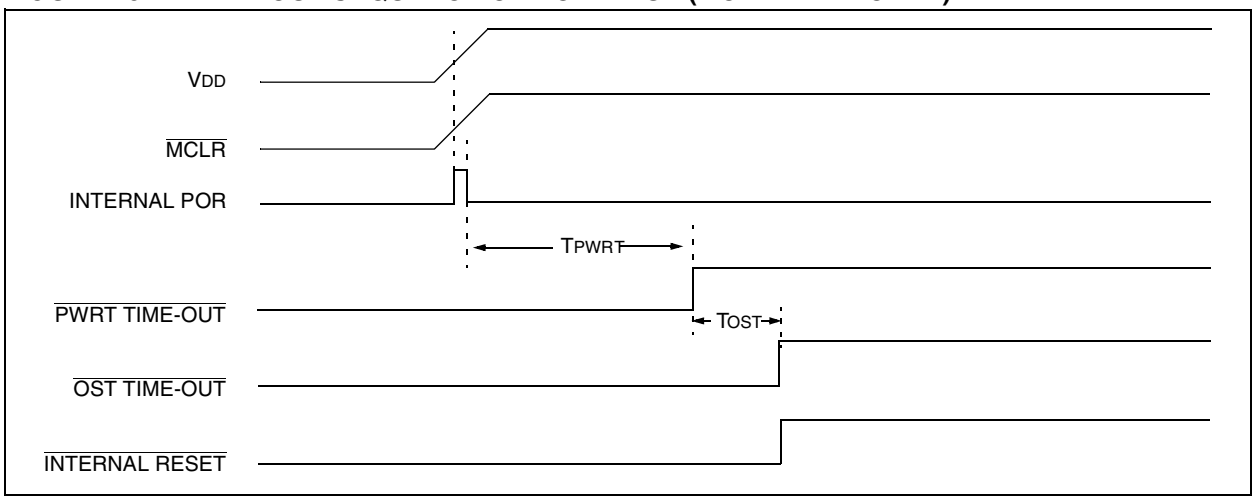

FIGURE 10-8: TIME-OUT SEQUENCE ON POWER-UP ($\overline{MCLR}$ NOT TIED TO V_{DD}): CASE 1

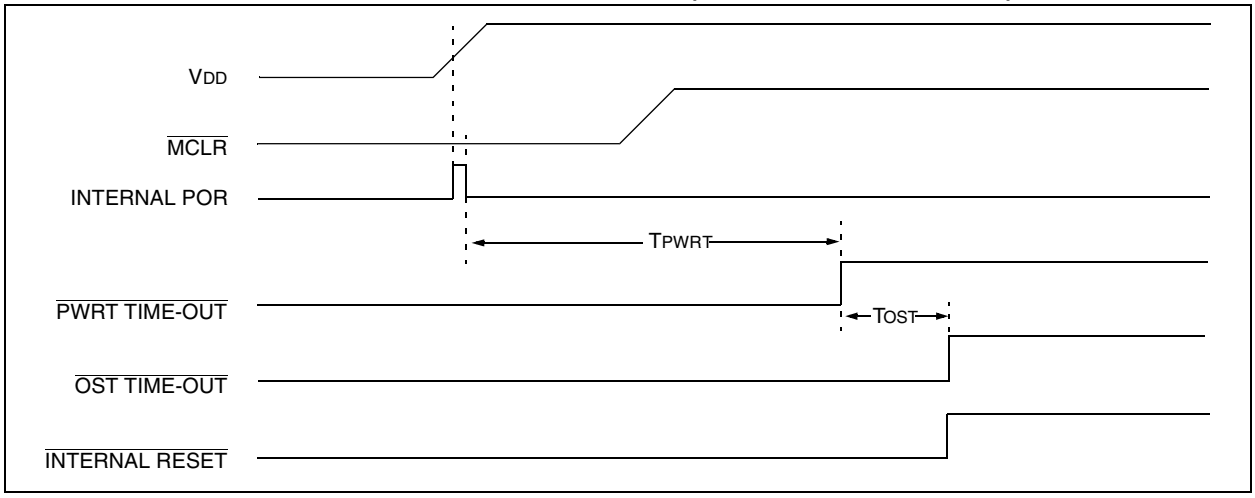

FIGURE 10-9: TIME-OUT SEQUENCE ON POWER-UP ($\overline{MCLR}$ NOT TIED TO V_{DD}): CASE 2

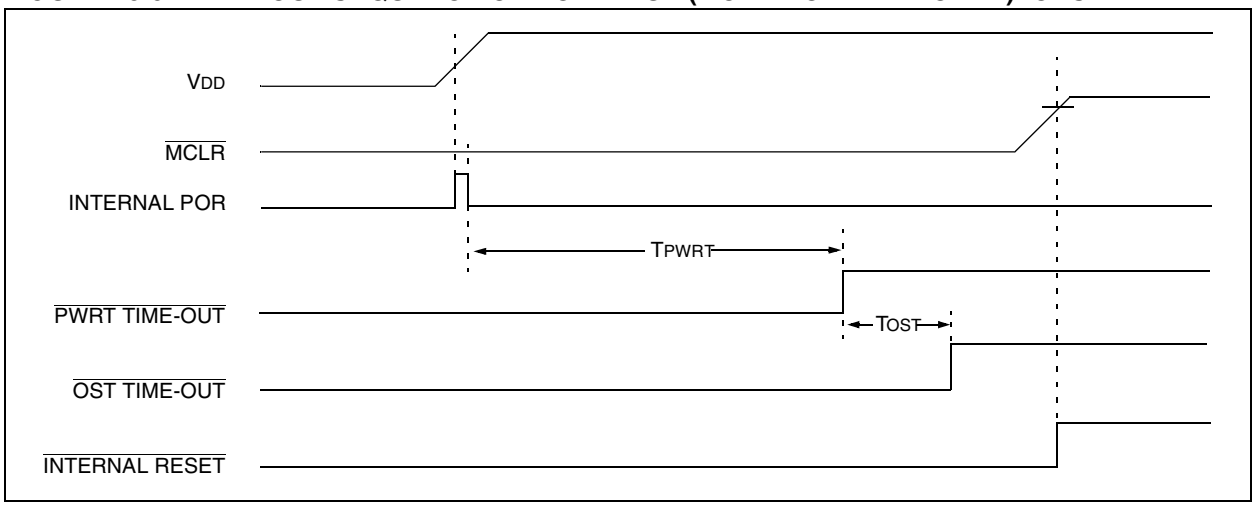

 © 1998-2013 Microchip Technology Inc.

FIGURE 10-10: SLOW RISE TIME ($\overline{MCLR}$ TIED TO V_{DD})

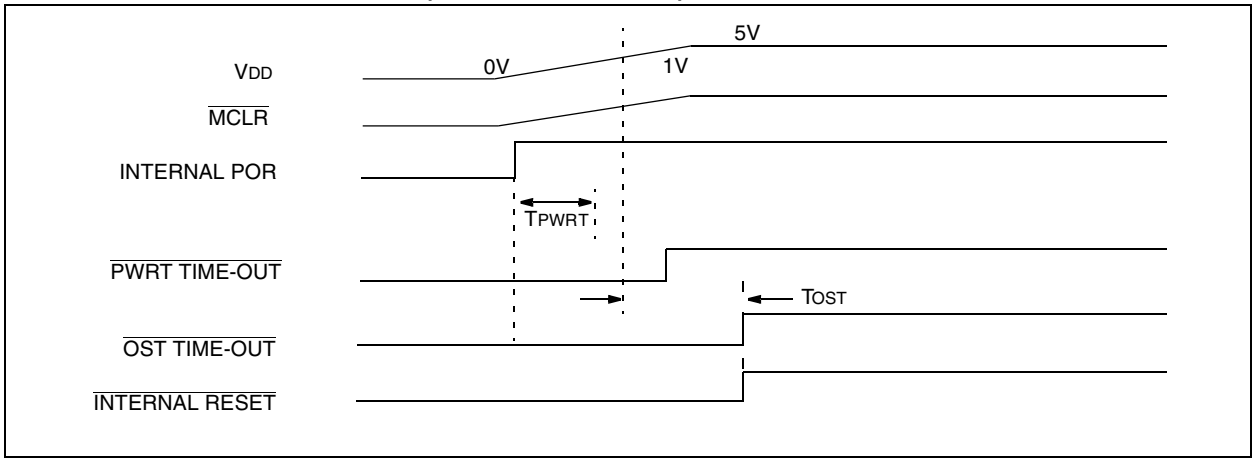

10.10 Interrupts

The PIC16C72/CR72 has 8 sources of interrupt. The interrupt control register (INTCON) records individual interrupt requests in flag bits. It also has individual and global interrupt enable bits.

Note:	Individual interrupt flag bits are set regardless of the status of their corresponding mask bit or the GIE bit.

A global interrupt enable bit, GIE (INTCON<7>) enables (if set) all un-masked interrupts or disables (if cleared) all interrupts. When bit GIE is enabled, and an interrupt's flag bit and mask bit are set, the interrupt will vector immediately. Individual interrupts can be disabled through their corresponding enable bits in various registers. Individual interrupt bits are set regardless of the status of the GIE bit. The GIE bit is cleared on reset.

The "return from interrupt" instruction, `RETFIE`, exits the interrupt routine as well as sets the GIE bit, which re-enables interrupts.

The RB0/INT pin interrupt, the RB port change interrupt and the TMR0 overflow interrupt flags are contained in the INTCON register.

The peripheral interrupt flags are contained in the special function registers PIR1 and PIR2. The corresponding interrupt enable bits are contained in special function registers PIE1 and PIE2, and the peripheral interrupt enable bit is contained in special function register INTCON.

When an interrupt is responded to, the GIE bit is cleared to disable any further interrupt, the return address is pushed onto the stack and the PC is loaded with 0004h. Once in the interrupt service routine the source(s) of the interrupt can be determined by polling the interrupt flag bits. The interrupt flag bit(s) must be cleared in software before re-enabling interrupts to avoid recursive interrupts.

For external interrupt events, such as the INT pin or PORTB change interrupt, the interrupt latency will be three or four instruction cycles. The exact latency depends when the interrupt event occurs. The latency is the same for one or two cycle instructions. Individual interrupt flag bits are set regardless of the status of their corresponding mask bit or the GIE bit

10.10.1 INT INTERRUPT

External interrupt on RB0/INT pin is edge triggered: either rising if bit INTEDG (OPTION<6>) is set, or falling, if the INTEDG bit is clear. When a valid edge appears on the RB0/INT pin, flag bit INTF (INTCON<1>) is set. This interrupt can be disabled by clearing enable bit INTE (INTCON<4>). Flag bit INTF must be cleared in software in the interrupt service routine before re-enabling this interrupt. The INT interrupt can wake-up the processor from SLEEP, if bit INTE was set prior to going into SLEEP. The status of global interrupt enable bit GIE decides whether or not the processor branches to the interrupt vector following wake-up. See Section 10.13 for details on SLEEP mode.

10.10.2 TMR0 INTERRUPT

An overflow (FFh → 00h) in the TMR0 register will set flag bit T0IF (INTCON<2>). The interrupt can be enabled/disabled by setting/clearing enable bit T0IE (INTCON<5>). (Section 4.0)

10.10.3 PORTB INTCON CHANGE

An input change on PORTB<7:4> sets flag bit RBIF (INTCON<0>). The interrupt can be enabled/disabled by setting/clearing enable bit RBIE (INTCON<4>). (Section 3.2)

FIGURE 10-11: INTERRUPT LOGIC

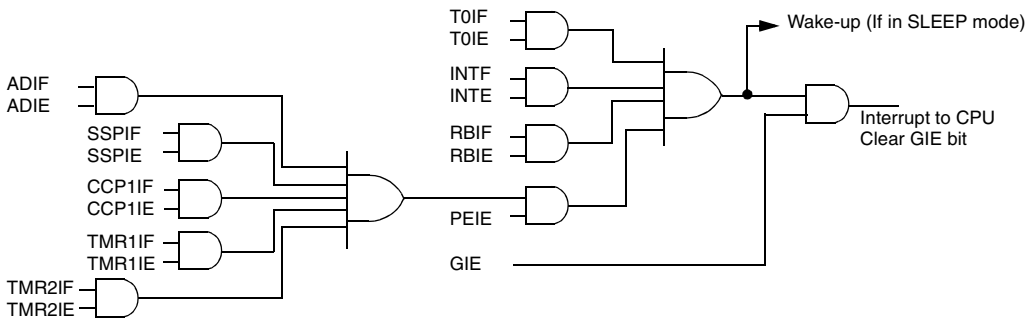

 © 1998-2013 Microchip Technology Inc.

10.11 Context Saving During Interrupts

During an interrupt, only the return PC value is saved on the stack. Typically, users may wish to save key registers during an interrupt, i.e., W register and STATUS register. This will have to be implemented in software.

Example 10-1 stores and restores the W and STATUS registers. The register, W_TEMP, must be defined in each bank and must be defined at the same offset from the bank base address (i.e., if W_TEMP is defined at 0x20 in bank 0, it must also be defined at 0xA0 in bank 1).

The example:

a) Stores the W register.
b) Stores the STATUS register in bank 0.
c) Executes the ISR code.
d) Restores the STATUS register (and bank select bit).
e) Restores the W register.

EXAMPLE 10-1: SAVING STATUS, W, AND PCLATH REGISTERS IN RAM

```
MOVWF    W_TEMP          ;Copy W to W_TEMP register, could be bank one or zero
SWAPF    STATUS,W        ;Swap status to be saved into W
CLRF     STATUS          ;bank 0, regardless of current bank, Clears IRP,RP1,RP0
MOVWF    STATUS_TEMP     ;Save status to bank zero STATUS_TEMP register
:
:Interrupt Service Routine (ISR) - user defined
:
SWAPF    STATUS_TEMP,W   ;Swap STATUS_TEMP register into W
                         ;(sets bank to original state)
MOVWF    STATUS          ;Move W into STATUS register
SWAPF    W_TEMP,F        ;Swap W_TEMP
SWAPF    W_TEMP,W        ;Swap W_TEMP into W
```

10.12 Watchdog Timer (WDT)

The Watchdog Timer is as a free running on-chip RC oscillator which does not require any external components. This RC oscillator is separate from the RC oscillator of the OSC1/CLKIN pin. That means that the WDT will run, even if the clock on the OSC1/CLKIN and OSC2/CLKOUT pins of the device has been stopped, for example, by execution of a `SLEEP` instruction.

During normal operation, a WDT time-out generates a device RESET (Watchdog Timer Reset). If the device is in SLEEP mode, a WDT time-out causes the device to wake-up and continue with normal operation (Watchdog Timer Wake-up). The $\overline{TO}$ bit in the STATUS register will be cleared upon a Watchdog Timer time-out.

The WDT can be permanently disabled by clearing configuration bit WDTE (Section 10.1).

WDT time-out period values may be found in the Electrical Specifications section under parameter #31. Values for the WDT prescaler (actually a postscaler, but shared with the Timer0 prescaler) may be assigned using the OPTION_REG register.

Note:	The `CLRWDT` and `SLEEP` instructions clear the WDT and the postscaler, if assigned to the WDT, and prevent it from timing out and generating a device RESET condition.

.

Note:	When a `CLRWDT` instruction is executed and the prescaler is assigned to the WDT, the prescaler count will be cleared, but the prescaler assignment is not changed.

FIGURE 10-12: WATCHDOG TIMER BLOCK DIAGRAM

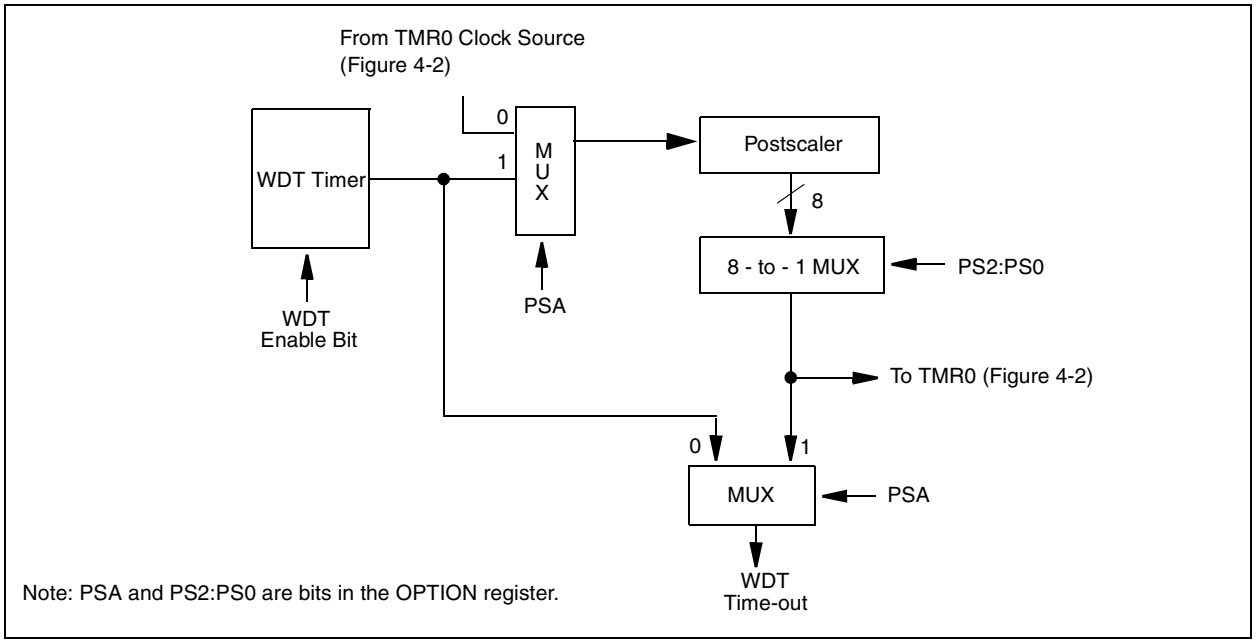

FIGURE 10-13: SUMMARY OF WATCHDOG TIMER REGISTERS

Address	Name	Bit 7	Bit 6	Bit 5	Bit 4	Bit 3	Bit 2	Bit 1	Bit 0
2007h	Config. bits	(1)	BODEN(1)	CP1	CP0	PWRTE(1)	WDTE	FOSC1	FOSC0
81h,181h	OPTION	$\overline{RBPU}$	INTEDG	T0CS	T0SE	PSA	PS2	PS1	PS0

Legend: Shaded cells are not used by the Watchdog Timer.
Note 1: See Figure 10-1 for operation of these bits.

 © 1998-2013 Microchip Technology Inc.

10.13 Power-down Mode (SLEEP)

Power-down mode is entered by executing a `SLEEP` instruction.

If enabled, the Watchdog Timer will be cleared but keeps running, the $\overline{PD}$ bit (STATUS<3>) is cleared, the $\overline{TO}$ (STATUS<4>) bit is set, and the oscillator driver is turned off. The I/O ports maintain the status they had, before the `SLEEP` instruction was executed (driving high, low, or hi-impedance).

For lowest current consumption in this mode, place all I/O pins at either V_{DD}, or V_{SS}, ensure no external circuitry is drawing current from the I/O pin, power-down the A/D, disable external clocks. Pull all I/O pins, that are hi-impedance inputs, high or low externally to avoid switching currents caused by floating inputs. The T0CKI input should also be at V_{DD} or V_{SS} for lowest current consumption. The contribution from on-chip pull-ups on PORTB should be considered.

The $\overline{MCLR}$ pin must be at a logic high level (V_{IHMC}).

10.13.1 WAKE-UP FROM SLEEP

The device can wake up from SLEEP through one of the following events:

1. External reset input on $\overline{MCLR}$ pin.
2. Watchdog Timer Wake-up (if WDT was enabled).
3. Interrupt from INT pin, RB port change, or some Peripheral Interrupts.

External $\overline{MCLR}$ Reset will cause a device reset. All other events are considered a continuation of program execution and cause a "wake-up". The $\overline{TO}$ and $\overline{PD}$ bits in the STATUS register can be used to determine the cause of device reset. The $\overline{PD}$ bit, which is set on power-up, is cleared when `SLEEP` is invoked. The $\overline{TO}$ bit is cleared if a WDT time-out occurred (and caused wake-up).

The following peripheral interrupts can wake the device from SLEEP:

1. TMR1 interrupt. Timer1 must be operating as an asynchronous counter.
2. SSP (Start/Stop) bit detect interrupt.
3. SSP transmit or receive in slave mode (SPI/I^2C).
4. CCP capture mode interrupt.
5. A/D conversion (when A/D clock source is RC).
6. Special event trigger (Timer1 in asynchronous mode using an external clock).

Other peripherals cannot generate interrupts since during SLEEP, no on-chip clocks are present.

When the SLEEP instruction is being executed, the next instruction (PC + 1) is pre-fetched. For the device to wake-up through an interrupt event, the corresponding interrupt enable bit must be set (enabled). Wake-up is regardless of the state of the GIE bit. If the GIE bit is clear (disabled), the device continues execution at the instruction after the SLEEP instruction. If the GIE bit is set (enabled), the device executes the instruction after the SLEEP instruction and then branches to the interrupt address (0004h). In cases where the execution of the instruction following SLEEP is not desirable, the user should have a NOP after the SLEEP instruction.

10.13.2 WAKE-UP USING INTERRUPTS

When global interrupts are disabled (GIE cleared) and any interrupt source has both its interrupt enable bit and interrupt flag bit set, one of the following will occur:

- If the interrupt occurs **before** the execution of a SLEEP instruction, the SLEEP instruction will complete as a NOP. Therefore, the WDT and WDT postscaler will not be cleared, the $\overline{TO}$ bit will not be set and $\overline{PD}$ bits will not be cleared.
- If the interrupt occurs **during or after** the execution of a SLEEP instruction, the device will immediately wake up from sleep. The SLEEP instruction will be completely executed before the wake-up. Therefore, the WDT and WDT postscaler will be cleared, the $\overline{TO}$ bit will be set and the $\overline{PD}$ bit will be cleared.

Even if the flag bits were checked before executing a SLEEP instruction, it may be possible for flag bits to become set before the SLEEP instruction completes. To determine whether a SLEEP instruction executed, test the $\overline{PD}$ bit. If the $\overline{PD}$ bit is set, the SLEEP instruction was executed as a NOP.

To ensure that the WDT is cleared, a CLRWDT instruction should be executed before a SLEEP instruction.

FIGURE 10-14: WAKE-UP FROM SLEEP THROUGH INTERRUPT

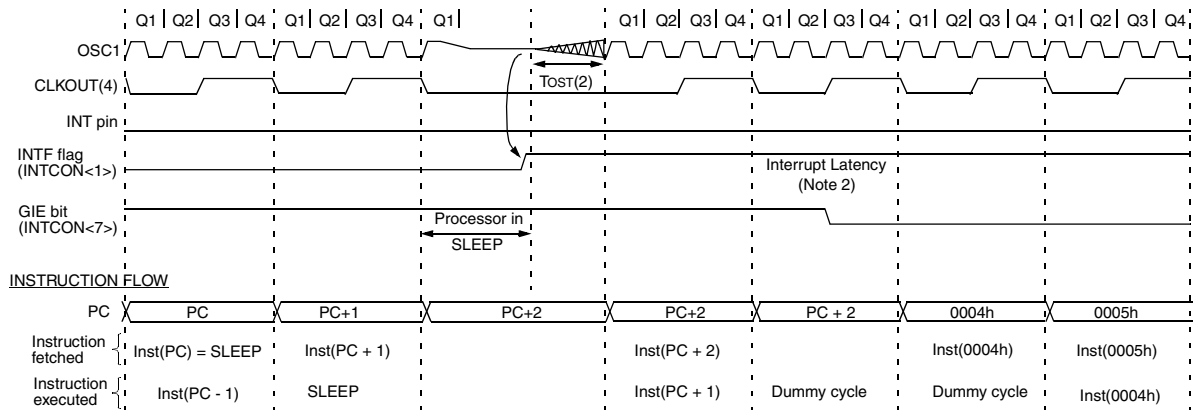

Note 1: XT, HS or LP oscillator mode assumed.
2: TOST = 1024TOSC (drawing not to scale) This delay will not be there for RC osc mode.
3: GIE = '1' assumed. In this case after wake- up, the processor jumps to the interrupt routine. If GIE = '0', execution will continue in-line.
4: CLKOUT is not available in these osc modes, but shown here for timing reference.

10.14 Program Verification/Code Protection

If the code protection bit(s) have not been programmed, the on-chip program memory can be read out for verification purposes.

Note:	Microchip does not recommend code protecting windowed devices.

10.15 ID Locations

Four memory locations (2000h - 2003h) are designated as ID locations where the user can store checksum or other code-identification numbers. These locations are not accessible during normal execution but are readable and writable during program/verify. It is recommended that only the 4 least significant bits of the ID location are used.

For ROM devices, these values are submitted along with the ROM code.

10.16 In-Circuit Serial Programming™

PIC16CXXX family microcontrollers can be serially programmed while in the end application circuit. This is simply done with two lines for clock and data, and three other lines for power, ground, and the programming voltage. This allows customers to manufacture boards with unprogrammed devices, and then program the microcontroller just before shipping the product. This also allows the most recent firmware or a custom firmware to be programmed.

For complete details of serial programming, please refer to the In-Circuit Serial Programming (ICSP™) Guide, DS30277.

 © 1998-2013 Microchip Technology Inc.

 © 1998-2013 Microchip Technology Inc.

11.0 INSTRUCTION SET SUMMARY

Each PIC16CXXX family instruction is a 14-bit word divided into an OPCODE which specifies the instruction type and one or more operands which further specify the operation of the instruction. The PIC16CXXX family instruction set summary in Table 11-2 lists **byte-oriented**, **bit-oriented**, and **literal and control** operations. Table 11-1 shows the opcode field descriptions.

For **byte-oriented** instructions, 'f' represents a file register designator and 'd' represents a destination designator. The file register designator specifies which file register is to be used by the instruction.

The destination designator specifies where the result of the operation is to be placed. If 'd' is zero, the result is placed in the W register. If 'd' is one, the result is placed in the file register specified in the instruction.

For **bit-oriented** instructions, 'b' represents a bit field designator which selects the number of the bit affected by the operation, while 'f' represents the number of the file in which the bit is located.

For **literal and control** operations, 'k' represents an eight or eleven bit constant or literal value.

TABLE 11-1 OPCODE FIELD DESCRIPTIONS

Field	Description
f	Register file address (0x00 to 0x7F)
W	Working register (accumulator)
b	Bit address within an 8-bit file register
k	Literal field, constant data or label
x	Don't care location (= 0 or 1) The assembler will generate code with x = 0. It is the recommended form of use for compatibility with all Microchip software tools.
d	Destination select; d = 0: store result in W, d = 1: store result in file register f. Default is d = 1
PC	Program Counter
$\overline{TO}$	Time-out bit
$\overline{PD}$	Power-down bit

The instruction set is highly orthogonal and is grouped into three basic categories:

- **Byte-oriented** operations
- **Bit-oriented** operations
- **Literal and control** operations

All instructions are executed within one single instruction cycle, unless a conditional test is true or the program counter is changed as a result of an instruction. In this case, the execution takes two instruction cycles with the second cycle executed as a NOP. One instruction cycle consists of four oscillator periods. Thus, for an oscillator frequency of 4 MHz, the normal instruction execution time is 1 μs. If a conditional test is true or the program counter is changed as a result of an instruction, the instruction execution time is 2 μs.

Table 11-2 lists the instructions recognized by the MPASM assembler.

Figure 11-1 shows the general formats that the instructions can have.

> **Note:** To maintain upward compatibility with future PIC16CXXX products, do not use the OPTION and TRIS instructions.

All examples use the following format to represent a hexadecimal number:

0xhh

where h signifies a hexadecimal digit.

FIGURE 11-1: GENERAL FORMAT FOR INSTRUCTIONS

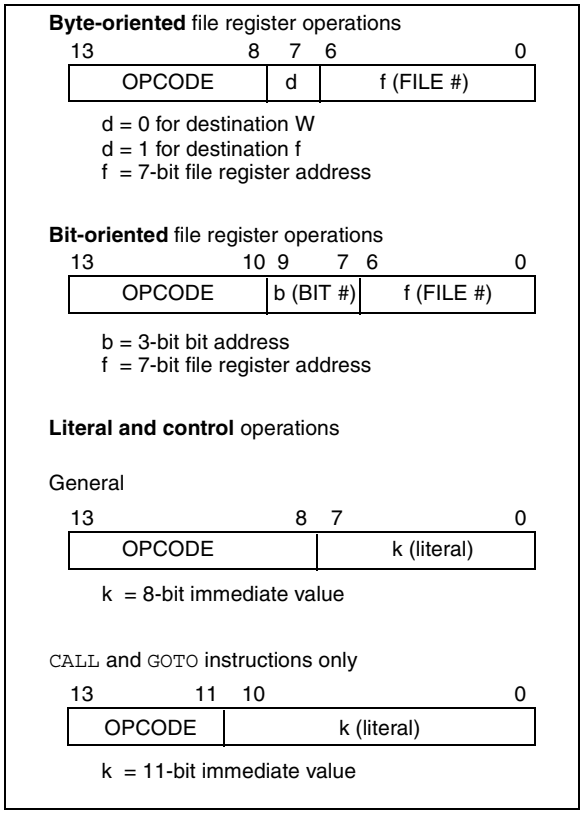

A description of each instruction is available in the PIC® Mid-Range MCU Family Reference Manual, DS33023.

TABLE 11-2 PIC16CXXX INSTRUCTION SET

Mnemonic, Operands		Description	Cycles	14-Bit Opcode MSb			LSb	Status Affected	Notes
BYTE-ORIENTED FILE REGISTER OPERATIONS									
ADDWF	**f, d**	Add W and f	1	00	0111	dfff	ffff	C,DC,Z	1,2
ANDWF	**f, d**	AND W with f	1	00	0101	dfff	ffff	Z	1,2
CLRF	**f**	Clear f	1	00	0001	1fff	ffff	Z	2
CLRW	**-**	Clear W	1	00	0001	0xxx	xxxx	Z	
COMF	**f, d**	Complement f	1	00	1001	dfff	ffff	Z	1,2
DECF	**f, d**	Decrement f	1	00	0011	dfff	ffff	Z	1,2
DECFSZ	**f, d**	Decrement f, Skip if 0	1(2)	00	1011	dfff	ffff		1,2,3
INCF	**f, d**	Increment f	1	00	1010	dfff	ffff	Z	1,2
INCFSZ	**f, d**	Increment f, Skip if 0	1(2)	00	1111	dfff	ffff		1,2,3
IORWF	**f, d**	Inclusive OR W with f	1	00	0100	dfff	ffff	Z	1,2
MOVF	**f, d**	Move f	1	00	1000	dfff	ffff	Z	1,2
MOVWF	**f**	Move W to f	1	00	0000	1fff	ffff		
NOP	**-**	No Operation	1	00	0000	0xx0	0000		
RLF	**f, d**	Rotate Left f through Carry	1	00	1101	dfff	ffff	C	1,2
RRF	**f, d**	Rotate Right f through Carry	1	00	1100	dfff	ffff	C	1,2
SUBWF	**f, d**	Subtract W from f	1	00	0010	dfff	ffff	C,DC,Z	1,2
SWAPF	**f, d**	Swap nibbles in f	1	00	1110	dfff	ffff		1,2
XORWF	**f, d**	Exclusive OR W with f	1	00	0110	dfff	ffff	Z	1,2
BIT-ORIENTED FILE REGISTER OPERATIONS									
BCF	**f, b**	Bit Clear f	1	01	00bb	bfff	ffff		1,2
BSF	**f, b**	Bit Set f	1	01	01bb	bfff	ffff		1,2
BTFSC	**f, b**	Bit Test f, Skip if Clear	1 (2)	01	10bb	bfff	ffff		3
BTFSS	**f, b**	Bit Test f, Skip if Set	1 (2)	01	11bb	bfff	ffff		3
LITERAL AND CONTROL OPERATIONS									
ADDLW	**k**	Add literal and W	1	11	111x	kkkk	kkkk	C,DC,Z	
ANDLW	**k**	AND literal with W	1	11	1001	kkkk	kkkk	Z	
CALL	**k**	Call subroutine	2	10	0kkk	kkkk	kkkk		
CLRWDT	**-**	Clear Watchdog Timer	1	00	0000	0110	0100	$\overline{TO}$,$\overline{PD}$	
GOTO	**k**	Go to address	2	10	1kkk	kkkk	kkkk		
IORLW	**k**	Inclusive OR literal with W	1	11	1000	kkkk	kkkk	Z	
MOVLW	**k**	Move literal to W	1	11	00xx	kkkk	kkkk		
RETFIE	**-**	Return from interrupt	2	00	0000	0000	1001		
RETLW	**k**	Return with literal in W	2	11	01xx	kkkk	kkkk		
RETURN	**-**	Return from Subroutine	2	00	0000	0000	1000		
SLEEP	**-**	Go into standby mode	1	00	0000	0110	0011	$\overline{TO}$,$\overline{PD}$	
SUBLW	**k**	Subtract W from literal	1	11	110x	kkkk	kkkk	C,DC,Z	
XORLW	**k**	Exclusive OR literal with W	1	11	1010	kkkk	kkkk	Z	

Note 1: When an I/O register is modified as a function of itself (e.g., `MOVF PORTB, 1`), the value used will be that value present on the pins themselves. For example, if the data latch is '1' for a pin configured as input and is driven low by an external device, the data will be written back with a '0'.

2: If this instruction is executed on the TMR0 register (and, where applicable, d = 1), the prescaler will be cleared if assigned to the Timer0 Module.

3: If Program Counter (PC) is modified or a conditional test is true, the instruction requires two cycles. The second cycle is executed as a NOP.

 © 1998-2013 Microchip Technology Inc.

12.0 DEVELOPMENT SUPPORT

12.1 Development Tools

The PICmicro™ microcontrollers are supported with a full range of hardware and software development tools:

- PICMASTER®/PICMASTER CE Real-Time In-Circuit Emulator
- ICEPIC™ Low-Cost PIC16C5X and PIC16CXXX In-Circuit Emulator
- PRO MATE® II Universal Programmer
- PICSTART® Plus Entry-Level Prototype Programmer
- PICDEM-1 Low-Cost Demonstration Board
- PICDEM-2 Low-Cost Demonstration Board
- PICDEM-3 Low-Cost Demonstration Board
- MPASM Assembler
- MPLAB™ SIM Software Simulator
- MPLAB-C17 (C Compiler)
- Fuzzy Logic Development System (*fuzzy*TECH®–MP)

A description of each development tool is available in the Midrange Reference Manual, DS33023.

12.2 PICDEM-2 Low-Cost PIC16CXX Demonstration Board

The PICDEM-2 is a simple demonstration board that supports the PIC16C62, PIC16C64, PIC16C65, PIC16C73 and PIC16C74 microcontrollers. All the necessary hardware and software is included to run the basic demonstration programs. The user can program the sample microcontrollers provided with the PICDEM-2 board, on a PRO MATE II programmer or PICSTART-Plus, and easily test firmware. The PICMASTER emulator may also be used with the PICDEM-2 board to test firmware. Additional prototype area has been provided to the user for adding additional hardware and connecting it to the microcontroller socket(s). Some of the features include a RS-232 interface, push-button switches, a potentiometer for simulated analog input, a Serial EEPROM to demonstrate usage of the I^2C bus and separate headers for connection to an LCD module and a keypad.

NOTES:

 © 1998-2013 Microchip Technology Inc.

13.0 ELECTRICAL CHARACTERISTICS - PIC16C72 SERIES

Absolute Maximum Ratings †

Parameter	PIC16C72	PIC16CR72
Ambient temperature under bias	-55 to +125°C	-55 to +125°C
Storage temperature	-65°C to +150°C	-65°C to +150°C
Voltage on any pin with respect to V_{SS} (except V_{DD}, $\overline{MCLR}$, and RA4)	-0.3V to (V_{DD} + 0.3V)	-0.3V to (V_{DD} + 0.3V)
Voltage on V_{DD} with respect to V_{SS}	-0.3 to +7.5V	TBD
Voltage on $\overline{MCLR}$ with respect to V_{SS} (Note 1)	-0.3 to +14V	TBD
Voltage on RA4 with respect to Vss	-0.3 to +14V	TBD
Total power dissipation (Note 2)	1.0W	1.0W
Maximum current out of V_{SS} pin	300 mA	300 mA
Maximum current into V_{DD} pin	250 mA	250 mA
Input clamp current, I_{IK} (V_I < 0 or V_I > V_{DD})	± 20 mA	± 20 mA
Output clamp current, IOK (V_O < 0 or V_O > V_{DD})	± 20 mA	± 20 mA
Maximum output current sunk by any I/O pin	25 mA	25 mA
Maximum output current sourced by any I/O pin	25 mA	25 mA
Maximum current sunk by PORTA and PORTB (combined)	200 mA	200 mA
Maximum current sourced by PORTA and PORTB (combined)	200 mA	200 mA
Maximum current sunk by PORTC	200 mA	200 mA
Maximum current sourced by PORTC	200 mA	200 mA

1. Voltage spikes below V_{SS} at the $\overline{MCLR}$ pin, inducing currents greater than 80 mA, may cause latch-up. Thus, a series resistor of 50-100Ω should be used when applying a “low” level to the $\overline{MCLR}$ pin rather than pulling this pin directly to V_{SS}.
2. Power dissipation is calculated as follows: $P_{dis} = V_{DD} \times \{I_{DD} - \sum I_{OH}\} + \sum \{(V_{DD} - V_{OH}) \times I_{OH}\} + \sum(V_{OI} \times I_{OL})$.

† NOTICE: Stresses above those listed under “Absolute Maximum Ratings” may cause permanent damage to the device. This is a stress rating only and functional operation of the device at those or any other conditions above those indicated in the operation listings of this specification is not implied. Exposure to maximum rating conditions for extended periods may affect device reliability.

TABLE 13-1 CROSS REFERENCE OF DEVICE SPECS (PIC16C72) FOR OSCILLATOR CONFIGURATIONS AND FREQUENCIES OF OPERATION (COMMERCIAL DEVICES)

OSC	PIC16C72-04	PIC16C72-10	PIC16C72-20	PIC16LC72-04	JW Devices
RC	VDD: 4.0V to 6.0V IDD: 5 mA max. at 5.5V IPD: 16 μA max. at 4V Freq: 4 MHz max.	VDD: 4.5V to 5.5V IDD: 2.7 mA typ. at 5.5V IPD: 1.5 μA typ. at 4V Freq: 4 MHz max.	VDD: 4.5V to 5.5V IDD: 2.7 mA typ. at 5.5V IPD: 1.5 μA typ. at 4V Freq: 4 MHz max.	VDD: 2.5V to 6.0V IDD: 3.8 mA max. at 3.0V IPD: 5.0 μA max. at 3V Freq: 4 MHz max.	VDD: 4.0V to 6.0V IDD: 5 mA max. at 5.5V IPD: 16 μA max. at 4V Freq: 4 MHz max.
XT	VDD: 4.0V to 6.0V IDD: 5 mA max. at 5.5V IPD: 16 μA max. at 4V Freq: 4 MHz max.	VDD: 4.5V to 5.5V IDD: 2.7 mA typ. at 5.5V IPD: 1.5 μA typ. at 4V Freq: 4 MHz max.	VDD: 4.5V to 5.5V IDD: 2.7 mA typ. at 5.5V IPD: 1.5 μA typ. at 4V Freq: 4 MHz max.	VDD: 2.5V to 6.0V IDD: 3.8 mA max. at 3.0V IPD: 5.0 μA max. at 3V Freq: 4 MHz max.	VDD: 4.0V to 6.0V IDD: 5 mA max. at 5.5V IPD: 16 μA max. at 4V Freq: 4 MHz max.
HS	VDD: 4.5V to 5.5V IDD: 13.5 mA typ. at 5.5V IPD: 1.5 μA typ. at 4.5V Freq: 4 MHz max.	VDD: 4.5V to 5.5V IDD: 10 mA max. at 5.5V IPD: 1.5 μA typ. at 4.5V Freq: 10 MHz max.	VDD: 4.5V to 5.5V IDD: 20 mA max. at 5.5V IPD: 1.5 μA typ. at 4.5V Freq: 20 MHz max.	Not recommended for use in HS mode	VDD: 4.5V to 5.5V IDD: 20 mA max. at 5.5V IPD: 1.5 μA typ. at 4.5V Freq: 20 MHz max.
LP	VDD: 4.0V to 6.0V IDD: 52.5 μA typ. at 32 kHz, 4.0V IPD: 0.9 μA typ. at 4.0V Freq: 200 kHz max.	Not recommended for use in LP mode	Not recommended for use in LP mode	VDD: 2.5V to 6.0V IDD: 48 μA max. at 32 kHz, 3.0V IPD: 5.0 μA max. at 3.0V Freq: 200 kHz max.	VDD: 2.5V to 6.0V IDD: 48 μA max. at 32 kHz, 3.0V IPD: 5.0 μA max. at 3.0V Freq: 200 kHz max.

The shaded sections indicate oscillator selections which are tested for functionality, but not for MIN/MAX specifications.
It is recommended that the user select the device type that ensures the specifications required.

TABLE 13-2 CROSS REFERENCE OF DEVICE SPECS (PIC16CR72) FOR OSCILLATOR CONFIGURATIONS AND FREQUENCIES OF OPERATION (COMMERCIAL DEVICES)

OSC	PIC16CR72-04	PIC16CR72-10	PIC16CR72-20	PIC16LCR72-04	JW Devices
RC	VDD: 4.0V to 5.5V IDD: 5 mA max. at 5.5V IPD: 16 μA max. at 4V Freq: 4 MHz max.	VDD: 4.5V to 5.5V IDD: 2.7 mA typ. at 5.5V IPD: 1.5 μA typ. at 4V Freq: 4 MHz max.	VDD: 4.5V to 5.5V IDD: 2.7 mA typ. at 5.5V IPD: 1.5 μA typ. at 4V Freq: 4 MHz max.	VDD: 2.5V to 5.5V IDD: 3.8 mA max. at 3.0V IPD: 5.0 μA max. at 3V Freq: 4 MHz max.	VDD: 4.0V to 5.5V IDD: 5 mA max. at 5.5V IPD: 16 μA max. at 4V Freq: 4 MHz max.
XT	VDD: 4.0V to 5.5V IDD: 5 mA max. at 5.5V IPD: 16 μA max. at 4V Freq: 4 MHz max.	VDD: 4.5V to 5.5V IDD: 2.7 mA typ. at 5.5V IPD: 1.5 μA typ. at 4V Freq: 4 MHz max.	VDD: 4.5V to 5.5V IDD: 2.7 mA typ. at 5.5V IPD: 1.5 μA typ. at 4V Freq: 4 MHz max.	VDD: 2.5V to 5.5V IDD: 3.8 mA max. at 3.0V IPD: 5.0 μA max. at 3V Freq: 4 MHz max.	VDD: 4.0V to 5.5V IDD: 5 mA max. at 5.5V IPD: 16 μA max. at 4V Freq: 4 MHz max.
HS	VDD: 4.5V to 5.5V IDD: 13.5 mA typ. at 5.5V IPD: 1.5 μA typ. at 4.5V Freq: 4 MHz max.	VDD: 4.5V to 5.5V IDD: 10 mA max. at 5.5V IPD: 1.5 μA typ. at 4.5V Freq: 10 MHz max.	VDD: 4.5V to 5.5V IDD: 20 mA max. at 5.5V IPD: 1.5 μA typ. at 4.5V Freq: 20 MHz max.	Not recommended for use in HS mode	VDD: 4.5V to 5.5V IDD: 20 mA max. at 5.5V IPD: 1.5 μA typ. at 4.5V Freq: 20 MHz max.
LP	VDD: 4.0V to 5.5V IDD: 52.5 μA typ. at 32 kHz, 4.0V IPD: 0.9 μA typ. at 4.0V Freq: 200 kHz max.	Not recommended for use in LP mode	Not recommended for use in LP mode	VDD: 2.5V to 5.5V IDD: 48 μA max. at 32 kHz, 3.0V IPD: 5.0 μA max. at 3.0V Freq: 200 kHz max.	VDD: 2.5V to 5.5V IDD: 48 μA max. at 32 kHz, 3.0V IPD: 5.0 μA max. at 3.0V Freq: 200 kHz max.

The shaded sections indicate oscillator selections which are tested for functionality, but not for MIN/MAX specifications.
It is recommended that the user select the device type that ensures the specifications required.

 © 1998-2013 Microchip Technology Inc.

13.1 DC Characteristics: PIC16C72/CR72-04 (Commercial, Industrial, Extended) PIC16C72/CR72-10 (Commercial, Industrial, Extended) PIC16C72/CR72-20 (Commercial, Industrial, Extended)

DC CHARACTERISTICS

Standard Operating Conditions (unless otherwise stated)
Operating temperature -40°C ≤ TA ≤ +125°C for extended,
-40°C ≤ TA ≤ +85°C for industrial and
0°C ≤ TA ≤ +70°C for commercial

Param No.	Characteristic	Sym	PIC16C72			PIC16CR72			Units	Conditions
			Min	Typ†	Max	Min	Typ†	Max		
D001	Supply Voltage	VDD	4.0	-	**6.0**	4.0	-	**5.5**	V	XT, RC and LP osc
D001A			4.5	-	5.5	4.5	-	5.5	V	HS osc
D002*	RAM Data Retention Voltage (Note 1)	VDR	-	1.5	-	-	1.5	-	V	
D003	VDD start voltage to ensure internal Power-on Reset Signal	VPOR	-	VSS	-	-	VSS	-	V	See section on Power-on Reset for details
D004*	VDD rise rate to ensure internal Power-on Reset Signal	SVDD	0.05	-	-	0.05	-	-	V/ms	See section on Power-on Reset for details
D005	Brown-out Reset Voltage	Bvdd	3.7	4.0	4.3	3.7	4.0	4.3	V	BODEN bit in configuration word enabled
			3.7	4.0	4.4	3.7	4.0	4.4	V	Extended Only
D010	Supply Current (Note 2,5)	IDD	-	2.7	5.0	-	2.7	5.0	mA	XT, RC osc FOSC = 4 MHz, VDD = 5.5V (Note 4)
D013			-	10	20	-	10	20	mA	HS osc FOSC = 20 MHz, VDD = 5.5V
D015	Brown-out Reset Current (Note 6)	ΔIbor	-	350	425	-	350	425	μA	BOR enabled, VDD = 5.0V
D020	Power-down Current (Note 3,5)	IPD	-	10.5	42	-	10.5	42	μA	VDD = 4.0V, WDT enabled, -40°C to +85°C
D021			-	1.5	16	-	1.5	16	μA	VDD = 4.0V, WDT disabled, -0°C to +70°C
D021A			-	1.5	19	-	1.5	19	μA	VDD = 4.0V, WDT disabled, -40°C to +85°C
D021B			-	2.5	19	-	2.5	19	μA	VDD = 4.0V, WDT disabled, -40°C to +125°C
D023	Brown-out Reset Current (Note 6)	ΔIbor	-	350	425	-	350	425	μA	BOR enabled VDD = 5.0V

* These parameters are characterized but not tested.

† Data in "Typ" column is at 5V, 25°C unless otherwise stated. These parameters are for design guidance only and are not tested.

Note 1: This is the limit to which VDD can be lowered without losing RAM data.

Note 2: The supply current is mainly a function of the operating voltage and frequency. Other factors such as I/O pin loading and switching rate, oscillator type, internal code execution pattern, and temperature also have an impact on the current consumption.

The test conditions for all IDD measurements in active operation mode are:
OSC1 = external square wave, from rail to rail; all I/O pins tristated, pulled to VDD
$\overline{MCLR}$ = VDD; WDT enabled/disabled as specified.

Note 3: The power-down current in SLEEP mode does not depend on the oscillator type. Power-down current is measured with the part in SLEEP mode, with all I/O pins in hi-impedance state and tied to VDD and VSS.

Note 4: For RC osc configuration, current through Rext is not included. The current through the resistor can be estimated by the formula Ir = VDD/2Rext (mA) with Rext in kOhm.

Note 5: Timer1 oscillator (when enabled) adds approximately 20 μA to the specification. This value is from characterization and is for design guidance only. This is not tested.

Note 6: The Δ current is the additional current consumed when this peripheral is enabled. This current should be added to the base IDD or IPD measurement.

13.2 DC Characteristics: PIC16LC72/LCR72-04 (Commercial, Industrial)

DC CHARACTERISTICS			Standard Operating Conditions (unless otherwise stated) Operating temperature -40°C ≤ TA ≤ +85°C for industrial and 0°C ≤ TA ≤ +70°C for commercial							
Param No.	Characteristic	Sym	PIC16C72			PIC16CR72			Units	Conditions
			Min	Typ†	Max	Min	Typ†	Max		
D001	Supply Voltage	VDD	**2.5**	-	**6.0**	**2.5**	-	**5.5**	V	LP, XT, RC (DC - 4 MHz)
D002*	RAM Data Retention Voltage (Note 1)	VDR	-	1.5	-	-	1.5	-	V	
D003	VDD start voltage to ensure internal Power-on Reset signal	VPOR	-	VSS	-	-	VSS	-	V	See section on Power-on Reset for details
D004*	VDD rise rate to ensure internal Power-on Reset signal	SVDD	0.05	-	-	0.05	-	-	V/ms	See section on Power-on Reset for details
D005	Brown-out Reset Voltage	Bvdd	3.7	4.0	4.3	3.7	4.0	4.3	V	BODEN bit in configuration word enabled
D010	Supply Current (Note 2,5)	IDD	-	2.0	3.8	-	2.0	3.8	mA	XT, RC osc configuration FOSC = 4 MHz, VDD = 3.0V (Note 4)
D010A			-	22.5	48	-	22.5	48	μA	LP osc configuration FOSC = 32 kHz, VDD = 3.0V, WDT disabled
D015*	Brown-out Reset Current (Note 6)	ΔIbor	-	350	425	-	350	425	μA	BOR enabled VDD = 5.0V
D020	Power-down Current (Note 3,5)	IPD	-	7.5	30	-	7.5	30	μA	VDD = 3.0V, WDT enabled, -40°C to +85°C
D021			-	0.9	5	-	0.9	5	μA	VDD = 3.0V, WDT disabled, 0°C to +70°C
D021A			-	0.9	5	-	0.9	5	μA	VDD = 3.0V, WDT disabled, -40°C to +85°C
D023*	Brown-out Reset Current (Note 6)	ΔIbor	-	350	425	-	350	425	μA	BOR enabled VDD = 5.0V

* These parameters are characterized but not tested.

† Data in "Typ" column is at 5V, 25°C unless otherwise stated. These parameters are for design guidance only and are not tested.

Note 1: This is the limit to which VDD can be lowered without losing RAM data.

Note 2: The supply current is mainly a function of the operating voltage and frequency. Other factors such as I/O pin loading and switching rate, oscillator type, internal code execution pattern, and temperature also have an impact on the current consumption.

The test conditions for all IDD measurements in active operation mode are:
OSC1 = external square wave, from rail to rail; all I/O pins tristated, pulled to VDD
$\overline{\text{MCLR}}$ = VDD; WDT enabled/disabled as specified.

Note 3: The power-down current in SLEEP mode does not depend on the oscillator type. Power-down current is measured with the part in SLEEP mode, with all I/O pins in hi-impedance state and tied to VDD and VSS.

Note 4: For RC osc configuration, current through Rext is not included. The current through the resistor can be estimated by the formula Ir = VDD/2Rext (mA) with Rext in kOhm.

Note 5: Timer1 oscillator (when enabled) adds approximately 20 μA to the specification. This value is from characterization and is for design guidance only. This is not tested.

Note 6: The Δ current is the additional current consumed when this peripheral is enabled. This current should be added to the base IDD or IPD measurement.

 © 1998-2013 Microchip Technology Inc.

13.3 DC Characteristics: PIC16C72/CR72-04 (Commercial, Industrial, Extended) PIC16C72/CR72-10 (Commercial, Industrial, Extended) PIC16C72/CR72-20 (Commercial, Industrial, Extended) PIC16LC72/LCR72-04 (Commercial, Industrial)

DC CHARACTERISTICS	Standard Operating Conditions (unless otherwise stated) Operating temperature -40°C ≤ TA ≤ +125°C for extended, -40°C ≤ TA ≤ +85°C for industrial and 0°C ≤ TA ≤ +70°C for commercial Operating voltage VDD range as described in DC spec Section 13.1 and Section 13.2.						
Param No.	**Characteristic**	**Sym**	**Min**	**Typ†**	**Max**	**Units**	**Conditions**
	Input Low Voltage						
	I/O ports	VIL					
D030	with TTL buffer		VSS	-	0.15VDD	V	For entire VDD range
D030A			Vss	-	0.8V	V	4.5 ≤ VDD ≤ 5.5V
D031	with Schmitt Trigger buffer		VSS	-	0.2VDD	V	
D032	$\overline{\text{MCLR}}$, OSC1 (in RC mode)		VSS	-	0.2VDD	V	
D033	OSC1 (in XT, HS and LP)		VSS	-	0.3VDD	V	Note1
	Input High Voltage						
	I/O ports	VIH		-			
D040	with TTL buffer		2.0	-	VDD	V	4.5 ≤ VDD ≤ 5.5V
D040A			0.25VDD + 0.8V	-	VDD	V	For entire VDD range
D041	with Schmitt Trigger buffer		0.8VDD	-	VDD	V	For entire VDD range
D042	MCLR		0.8VDD	-	VDD	V	
D042A	OSC1 (XT, HS and LP)		0.7VDD	-	Vdd	V	Note1
D043	OSC1 (in RC mode)		0.9VDD	-	VDD	V	
D070	**PORTB weak pull-up current**	IPURB	50	250	†400	μA	VDD = 5V, VPIN = VSS
	Input Leakage Current (Notes 2, 3)						
D060	I/O ports	IIL	-	-	±1	μA	Vss ≤ VPIN ≤ VDD, Pin at hi-impedance
D061	$\overline{\text{MCLR}}$, RA4/T0CKI		-	-	±5	μA	Vss ≤ VPIN ≤ VDD
D063	OSC1		-	-	±5	μA	Vss ≤ VPIN ≤ VDD, XT, HS and LP osc configuration
	Output Low Voltage						
D080	I/O ports	VOL	-	-	0.6	V	IOL = 8.5 mA, VDD = 4.5V, -40°C to +85°C
D080A			-	-	0.6	V	IOL = 7.0 mA, VDD = 4.5V, -40°C to +125°C
D083	OSC2/CLKOUT (RC osc config)		-	-	0.6	V	IOL = 1.6 mA, VDD = 4.5V, -40°C to +85°C
D083A			-	-	0.6	V	IOL = 1.2 mA, VDD = 4.5V, -40°C to +125°C

* These parameters are characterized but not tested.

† Data in "Typ" column is at 5V, 25°C unless otherwise stated. These parameters are for design guidance only and are not tested.

Note 1: In RC oscillator configuration, the OSC1/CLKIN pin is a Schmitt trigger input. It is not recommended that the PIC16C7X be driven with external clock in RC mode.

Note 2: The leakage current on the $\overline{\text{MCLR}}$/VPP pin is strongly dependent on the applied voltage level. The specified levels represent normal operating conditions. Higher leakage current may be measured at different input voltages.

Note 3: Negative current is defined as current sourced by the pin.

DC CHARACTERISTICS							Standard Operating Conditions (unless otherwise stated) Operating temperature -40°C ≤ TA ≤ +125°C for extended, -40°C ≤ TA ≤ +85°C for industrial and 0°C ≤ TA ≤ +70°C for commercial Operating voltage VDD range as described in DC spec Section 13.1 and Section 13.2.
Param No.	**Characteristic**	**Sym**	**Min**	**Typ†**	**Max**	**Units**	**Conditions**
	Output High Voltage						
D090	I/O ports (Note 3)	VOH	VDD - 0.7	-	-	V	IOH = -3.0 mA, VDD = 4.5V, -40°C to +85°C
D090A			VDD - 0.7	-	-	V	IOH = -2.5 mA, VDD = 4.5V, -40°C to +125°C
D092	OSC2/CLKOUT (RC osc config)		VDD - 0.7	-	-	V	IOH = -1.3 mA, VDD = 4.5V, -40°C to +85°C
D092A			VDD - 0.7	-	-	V	IOH = -1.0 mA, VDD = 4.5V, -40°C to +125°C
D150*	**Open-Drain High Voltage**	Vod	-	-	14	V	RA4 pin, PIC16**C**72/**LC**72
			-	-	TBD	V	RA4 pin, PIC16**CR**72/**LCR**72
	Capacitive Loading Specs on Output Pins						
D100	OSC2 pin	COSC2	-	-	15	pF	In XT, HS and LP modes when external clock is used to drive OSC1.
D101	All I/O pins and OSC2 (in RC mode)	CIO	-	-	50	pF	
D102	SCL, SDA in I^2C mode	Cb	-	-	400	pF	

* These parameters are characterized but not tested.

† Data in "Typ" column is at 5V, 25°C unless otherwise stated. These parameters are for design guidance only and are not tested.

Note 1: In RC oscillator configuration, the OSC1/CLKIN pin is a Schmitt trigger input. It is not recommended that the PIC16C7X be driven with external clock in RC mode.

Note 2: The leakage current on the $\overline{MCLR}$/VPP pin is strongly dependent on the applied voltage level. The specified levels represent normal operating conditions. Higher leakage current may be measured at different input voltages.

Note 3: Negative current is defined as current sourced by the pin.

 © 1998-2013 Microchip Technology Inc.

13.4 Timing Parameter Symbology

The timing parameter symbols have been created following one of the following formats:

1. TppS2ppS
2. TppS
3. TCC:ST (I²C specifications only)
4. Ts (I²C specifications only)

T			
F	Frequency	T	Time

Lowercase letters (pp) and their meanings:

pp			
cc	CCP1	osc	OSC1
ck	CLKOUT	rd	$\overline{RD}$
cs	$\overline{CS}$	rw	$\overline{RD}$ or $\overline{WR}$
di	SDI	sc	SCK
do	SDO	ss	$\overline{SS}$
dt	Data in	t0	T0CKI
io	I/O port	t1	T1CKI
mc	$\overline{MCLR}$	wr	$\overline{WR}$

Uppercase letters and their meanings:

S			
F	Fall	P	Period
H	High	R	Rise
I	Invalid (Hi-impedance)	V	Valid
L	Low	Z	Hi-impedance
I²C only			
AA	output access	High	High
BUF	Bus free	Low	Low

TCC:ST (I²C specifications only)

CC			
HD	Hold	SU	Setup
ST			
DAT	DATA input hold	STO	STOP condition
STA	START condition		

FIGURE 13-1: LOAD CONDITIONS

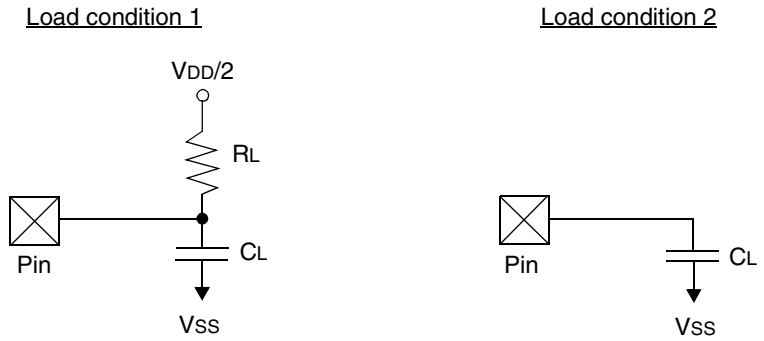

RL = 464Ω
CL = 50 pF for all pins except OSC2
15 pF for OSC2 output

13.5 Timing Diagrams and Specifications

FIGURE 13-2: EXTERNAL CLOCK TIMING

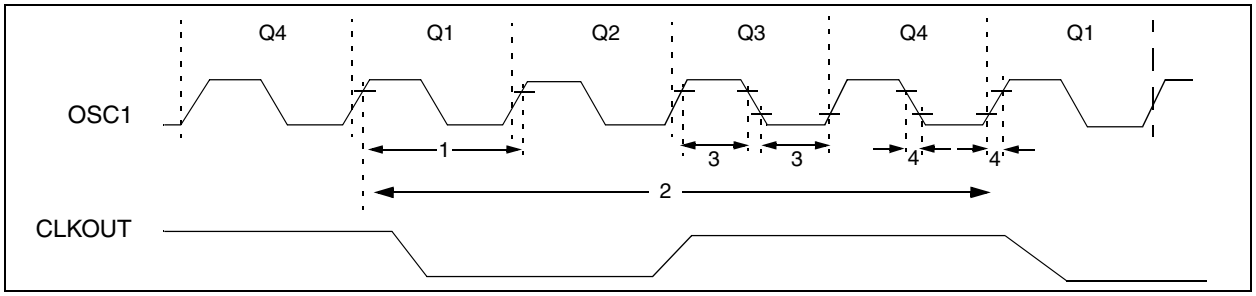

TABLE 13-3 EXTERNAL CLOCK TIMING REQUIREMENTS

Parameter No.	Sym	Characteristic	Min	Typ†	Max	Units	Conditions
	Fosc	External CLKIN Frequency (Note 1)	DC	—	4	MHz	XT and RC osc mode
			DC	—	4	MHz	HS osc mode (-04)
			DC	—	10	MHz	HS osc mode (-10)
			DC	—	20	MHz	HS osc mode (-20)
			DC	—	200	kHz	LP osc mode
		Oscillator Frequency (Note 1)	DC	—	4	MHz	RC osc mode
			0.1	—	4	MHz	XT osc mode
			4	—	20	MHz	HS osc mode
			5	—	200	kHz	LP osc mode
1	Tosc	External CLKIN Period (Note 1)	250	—	—	ns	XT and RC osc mode
			250	—	—	ns	HS osc mode (-04)
			100	—	—	ns	HS osc mode (-10)
			50	—	—	ns	HS osc mode (-20)
			5	—	—	μs	LP osc mode
		Oscillator Period (Note 1)	250	—	—	ns	RC osc mode
			250	—	10,000	ns	XT osc mode
			250	—	250	ns	HS osc mode (-04)
			100	—	250	ns	HS osc mode (-10)
			50	—	250	ns	HS osc mode (-20)
			5	—	—	μs	LP osc mode
2	TCY	Instruction Cycle Time (Note 1)	200	—	DC	ns	TCY = 4/FOSC
3	TosL, TosH	External Clock in (OSC1) High or Low Time	100	—	—	ns	XT oscillator
			2.5	—	—	μs	LP oscillator
			15	—	—	ns	HS oscillator
4	TosR, TosF	External Clock in (OSC1) Rise or Fall Time	—	—	25	ns	XT oscillator
			—	—	50	ns	LP oscillator
			—	—	15	ns	HS oscillator

† Data in "Typ" column is at 5V, 25°C unless otherwise stated. These parameters are for design guidance only and are not tested.

Note 1: Instruction cycle period (TCY) equals four times the input oscillator time-base period. All specified values are based on characterization data for that particular oscillator type under standard operating conditions with the device executing code. Exceeding these specified limits may result in an unstable oscillator operation and/or higher than expected current consumption. All devices are tested to operate at "min." values with an external clock applied to the OSC1/CLKIN pin. When an external clock input is used, the "Max." cycle time limit is "DC" (no clock) for all devices.

 © 1998-2013 Microchip Technology Inc.

FIGURE 13-3: CLKOUT AND I/O TIMING

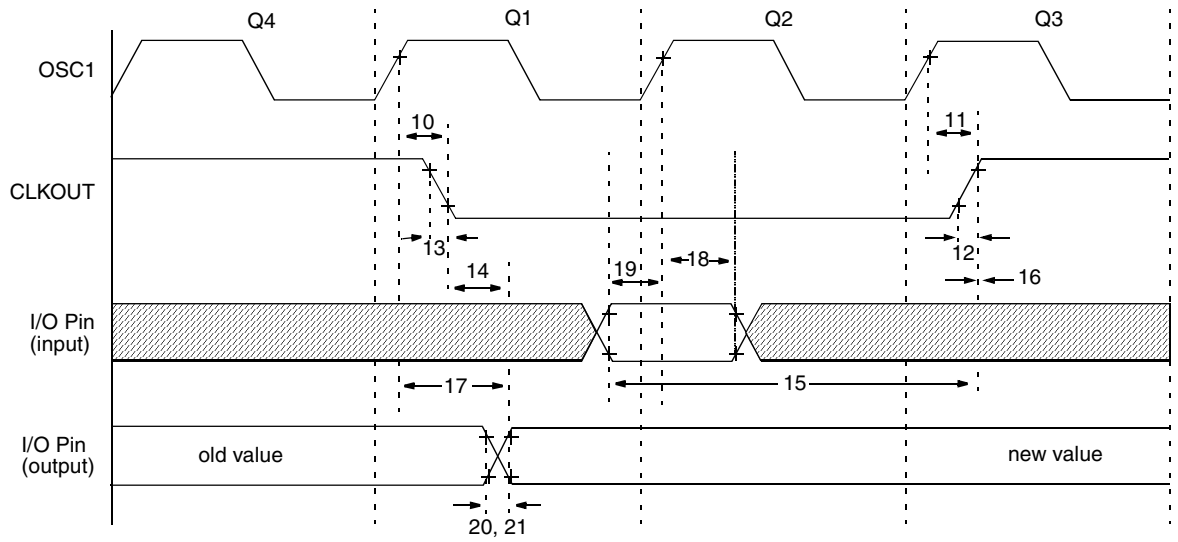

Note: Refer to Figure 13-1 for load conditions.

TABLE 13-4 CLKOUT AND I/O TIMING REQUIREMENTS

Parameter No.	Sym	Characteristic		Min	Typ†	Max	Units	Conditions
10*	TosH2ckL	OSC1↑ to CLKOUT↓		—	75	200	ns	Note 1
11*	TosH2ckH	OSC1↑ to CLKOUT↑		—	75	200	ns	Note 1
12*	TckR	CLKOUT rise time		—	35	100	ns	Note 1
13*	TckF	CLKOUT fall time		—	35	100	ns	Note 1
14*	TckL2ioV	CLKOUT ↓ to Port out valid		—	—	0.5TCY + 20	ns	Note 1
15*	TioV2ckH	Port in valid before CLKOUT ↑		TOSC + 200	—	—	ns	Note 1
16*	TckH2ioI	Port in hold after CLKOUT ↑		0	—	—	ns	Note 1
17*	TosH2ioV	OSC1↑ (Q1 cycle) to Port out valid		—	50	150	ns	
18*	TosH2ioI	OSC1↑ (Q2 cycle) to Port input invalid (I/O in hold time)	PIC16**C**72/**CR**72	100	—	—	ns	
			PIC16**LC**72/**LCR**72	200	—	—	ns	
19*	TioV2osH	Port input valid to OSC1↑ (I/O in setup time)		0	—	—	ns	
20*	TioR	Port output rise time	PIC16**C**72/**CR**72	—	10	40	ns	
			PIC16**LC**72/**LCR**72	—	—	80	ns	
21*	TioF	Port output fall time	PIC16**C**72/**CR**72	—	10	40	ns	
			PIC16**LC**72/**LCR**72	—	—	80	ns	
22††*	Tinp	INT pin high or low time		TCY	—	—	ns	
23††*	Trbp	RB7:RB4 change INT high or low time		TCY	—	—	ns	

* These parameters are characterized but not tested.

† Data in "Typ" column is at 5V, 25°C unless otherwise stated. These parameters are for design guidance only and are not tested.

†† These parameters are asynchronous events not related to any internal clock edges.

Note 1: Measurements are taken in RC Mode where CLKOUT output is 4 x TOSC.

FIGURE 13-4: RESET, WATCHDOG TIMER, OSCILLATOR START-UP TIMER AND POWER-UP TIMER TIMING

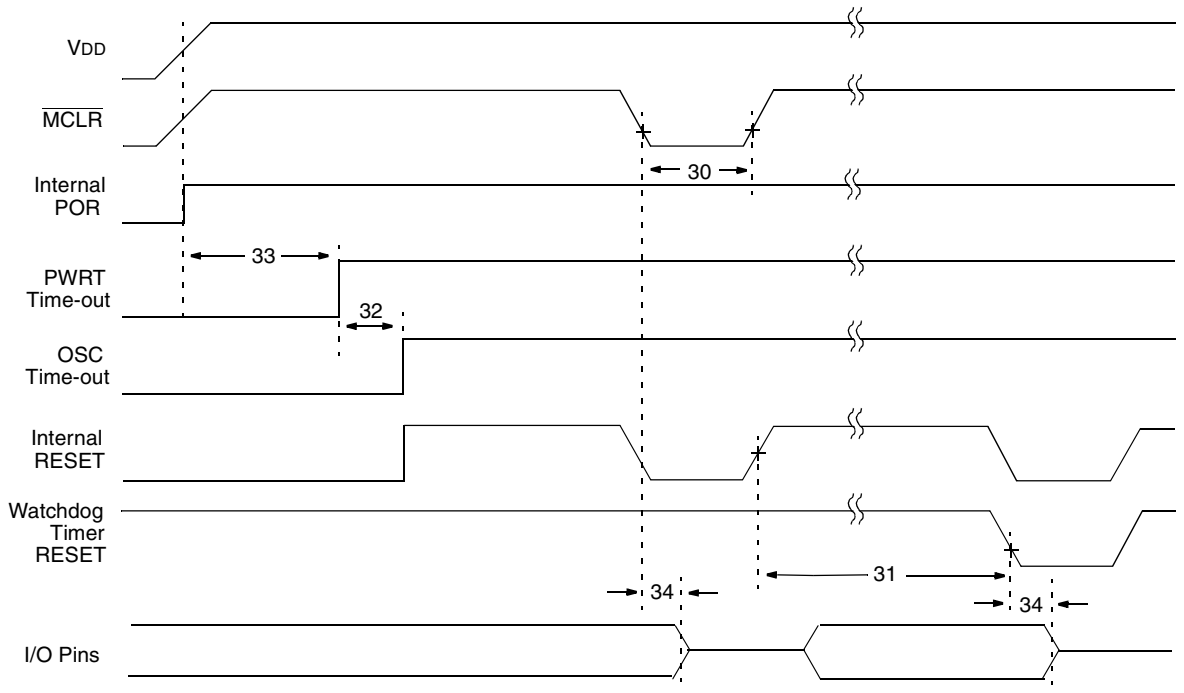

Note: Refer to Figure 13-1 for load conditions.

FIGURE 13-5: BROWN-OUT RESET TIMING

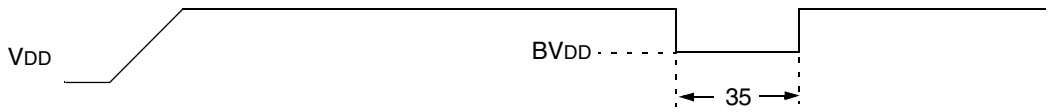

TABLE 13-5 RESET, WATCHDOG TIMER, OSCILLATOR START-UP TIMER, POWER-UP TIMER, AND BROWN-OUT RESET REQUIREMENTS

Parameter No.	Sym	Characteristic	Min	Typ†	Max	Units	Conditions
30	TmcL	MCLR Pulse Width (low)	2	—	—	μs	VDD = 5V, -40°C to +125°C
31*	Twdt	Watchdog Timer Time-out Period (No Prescaler)	7	18	33	ms	VDD = 5V, -40°C to +125°C
32	Tost	Oscillation Start-up Timer Period	—	1024TOSC	—	—	TOSC = OSC1 period
33*	Tpwrt	Power-up Timer Period	28	72	132	ms	VDD = 5V, -40°C to +125°C
34	TIOZ	I/O Hi-impedance from $\overline{\text{MCLR}}$ Low or Watchdog Timer Reset	—	—	2.1	μs	
35	TBOR	Brown-out Reset pulse width	100	—	—	μs	VDD ≤ BVDD (D005)

* These parameters are characterized but not tested.

† Data in "Typ" column is at 5V, 25°C unless otherwise stated. These parameters are for design guidance only and are not tested.

 © 1998-2013 Microchip Technology Inc.

FIGURE 13-6: TIMER0 AND TIMER1 EXTERNAL CLOCK TIMINGS

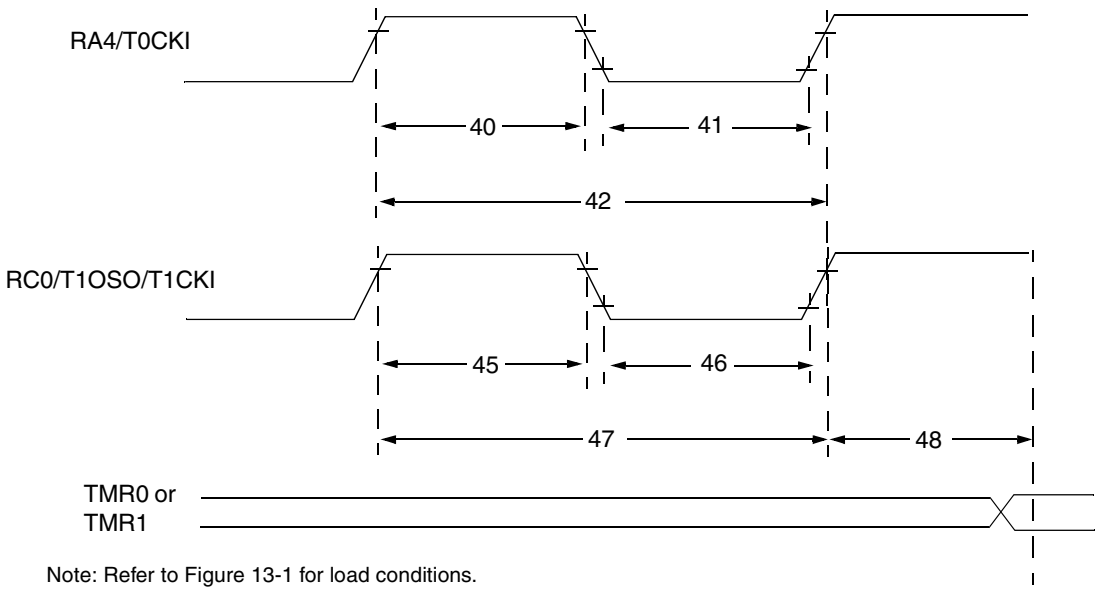

Note: Refer to Figure 13-1 for load conditions.

TABLE 13-6 TIMER0 AND TIMER1 EXTERNAL CLOCK REQUIREMENTS

Param No.	Sym	Characteristic			Min	Typ†	Max	Units	Conditions
40*	Tt0H	T0CKI High Pulse Width		No Prescaler	0.5TCY + 20	—	—	ns	Must also meet parameter 42
				With Prescaler	10	—	—	ns	
41*	Tt0L	T0CKI Low Pulse Width		No Prescaler	0.5TCY + 20	—	—	ns	Must also meet parameter 42
				With Prescaler	10	—	—	ns	
42*	Tt0P	T0CKI Period		No Prescaler	TCY + 40	—	—	ns	
				With Prescaler	Greater of: 20 or TCY + 40 / N	—	—	ns	N = prescale value (2, 4, ..., 256)
45*	Tt1H	T1CKI High Time	Synchronous, Prescaler = 1		0.5TCY + 20	—	—	ns	Must also meet parameter 47
			Synchronous, Prescaler = 2,4,8	PIC16**C**7X/**CR**72	15	—	—	ns	
				PIC16**LC**7X/**LCR**72	25	—	—	ns	
			Asynchronous	PIC16**C**7X/**CR**72	30	—	—	ns	
				PIC16**LC**7X/**LCR**72	50	—	—	ns	
46*	Tt1L	T1CKI Low Time	Synchronous, Prescaler = 1		0.5TCY + 20	—	—	ns	Must also meet parameter 47
			Synchronous, Prescaler = 2,4,8	PIC16**C**7X/**CR**72	15	—	—	ns	
				PIC16**LC**7X/**LCR**72	25	—	—	ns	
			Asynchronous	PIC16**C**7X/**CR**72	30	—	—	ns	
				PIC16**LC**7X/**LCR**72	50	—	—	ns	
47*	Tt1P	T1CKI input period	Synchronous	PIC16**C**7X/**CR**72	Greater of: 30 OR TCY + 40 / N	—	—	ns	N = prescale value (1, 2, 4, 8)
				PIC16**LC**7X/**LCR**72	Greater of: 50 OR TCY + 40 / N				N = prescale value (1, 2, 4, 8)
			Asynchronous	PIC16**C**7X/**CR**72	60	—	—	ns	
				PIC16**LC**7X/**LCR**72	100	—	—	ns	
	Ft1	Timer1 oscillator input frequency range (oscillator enabled by setting bit T1OSCEN)			DC	—	200	kHz	
48	TCKEZtmr1	Delay from external clock edge to timer increment			2Tosc	—	7Tosc	—	

* These parameters are characterized but not tested.

† Data in "Typ" column is at 5V, 25°C unless otherwise stated. These parameters are for design guidance only and are not tested.

FIGURE 13-7: CAPTURE/COMPARE/PWM TIMINGS (CCP1)

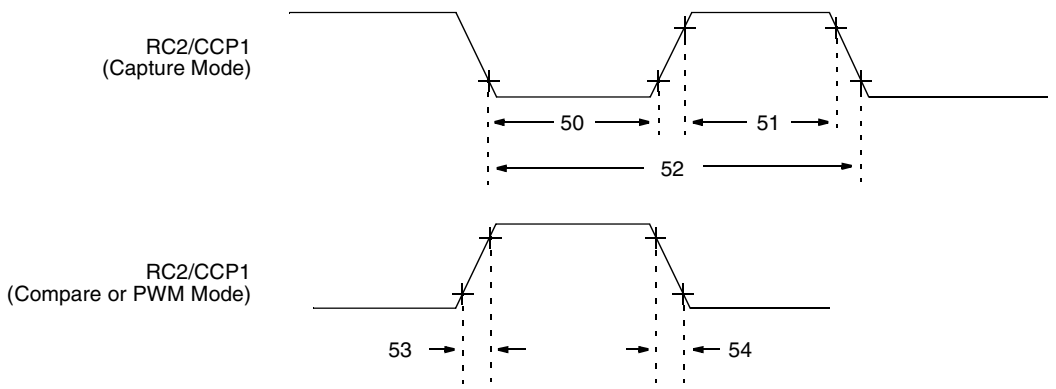

Note: Refer to Figure 13-1 for load conditions.

TABLE 13-7 CAPTURE/COMPARE/PWM REQUIREMENTS (CCP1)

Param No.	Sym	Characteristic			Min	Typ†	Max	Units	Conditions
50*	TccL	CCP1 input low time	No Prescaler		0.5TCY + 20	—	—	ns	
			With Prescaler	PIC16**C**72/**CR**72	10	—	—	ns	
				PIC16**LC**72/**LCR**72	20	—	—	ns	
51*	TccH	CCP1 input high time	No Prescaler		0.5TCY + 20	—	—	ns	
			With Prescaler	PIC16**C**72/**CR**72	10	—	—	ns	
				PIC16**LC**72/**LCR**72	20	—	—	ns	
52*	TccP	CCP1 input period			$\frac{3T_{CY} + 40}{N}$	—	—	ns	N = prescale value (1,4 or 16)
53*	TccR	CCP1 output rise time		PIC16**C**72/**CR**72	—	10	25	ns	
				PIC16**LC**72/**LCR**72	—	25	45	ns	
54*	TccF	CCP1 output fall time		PIC16**C**72/**CR**72	—	10	25	ns	
				PIC16**LC**72/**LCR**72	—	25	45	ns	

* These parameters are characterized but not tested.

† Data in "Typ" column is at 5V, 25°C unless otherwise stated. These parameters are for design guidance only and are not tested.

 © 1998-2013 Microchip Technology Inc.

FIGURE 13-8: SPI MASTER OPERATION TIMING (CKE = 0)

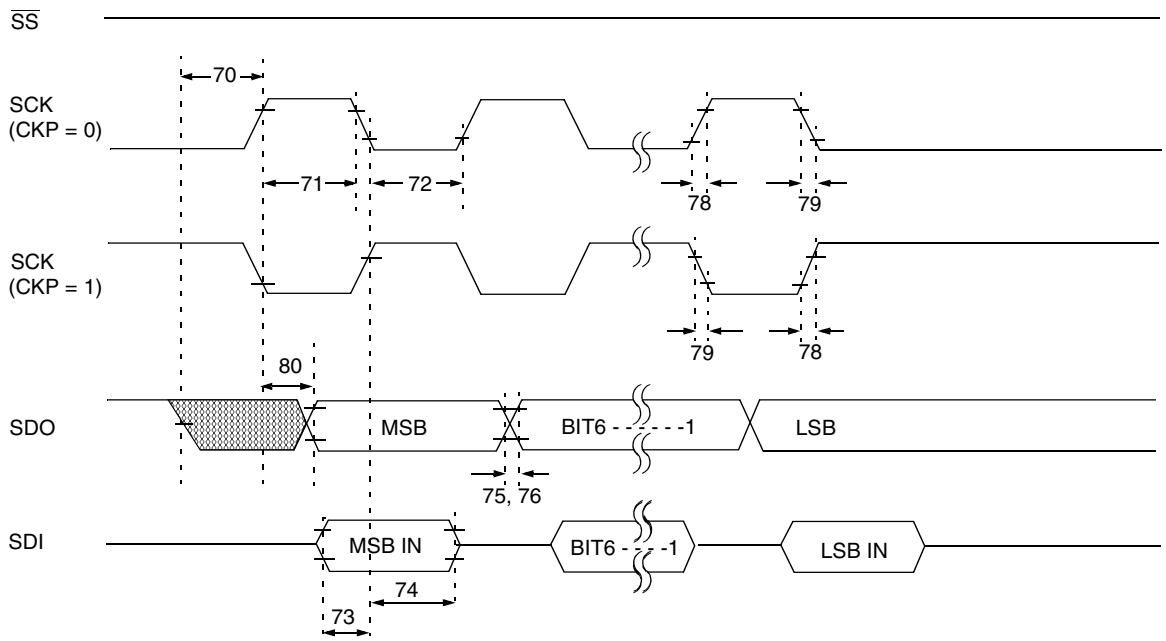

Refer to Figure 13-1 for load conditions.

FIGURE 13-9: SPI MASTER OPERATION TIMING (CKE = 1)

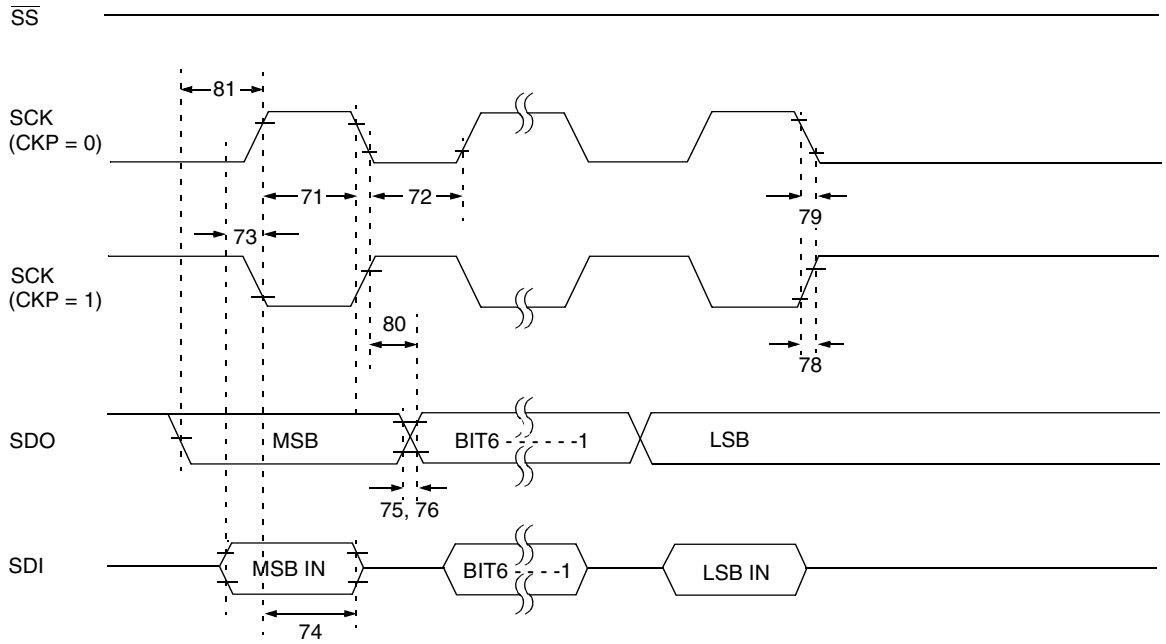

Refer to Figure 13-1 for load conditions.

FIGURE 13-10: SPI SLAVE MODE TIMING (CKE = 0)

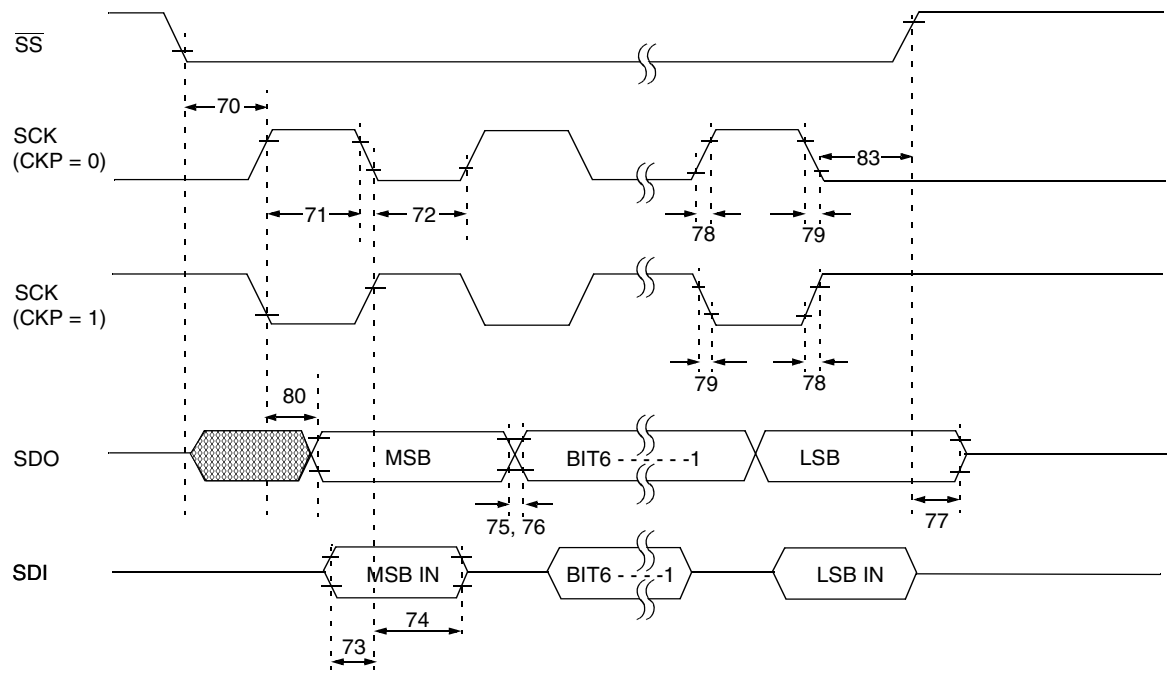

Refer to Figure 13-1 for load conditions.

FIGURE 13-11: SPI SLAVE MODE TIMING (CKE = 1)

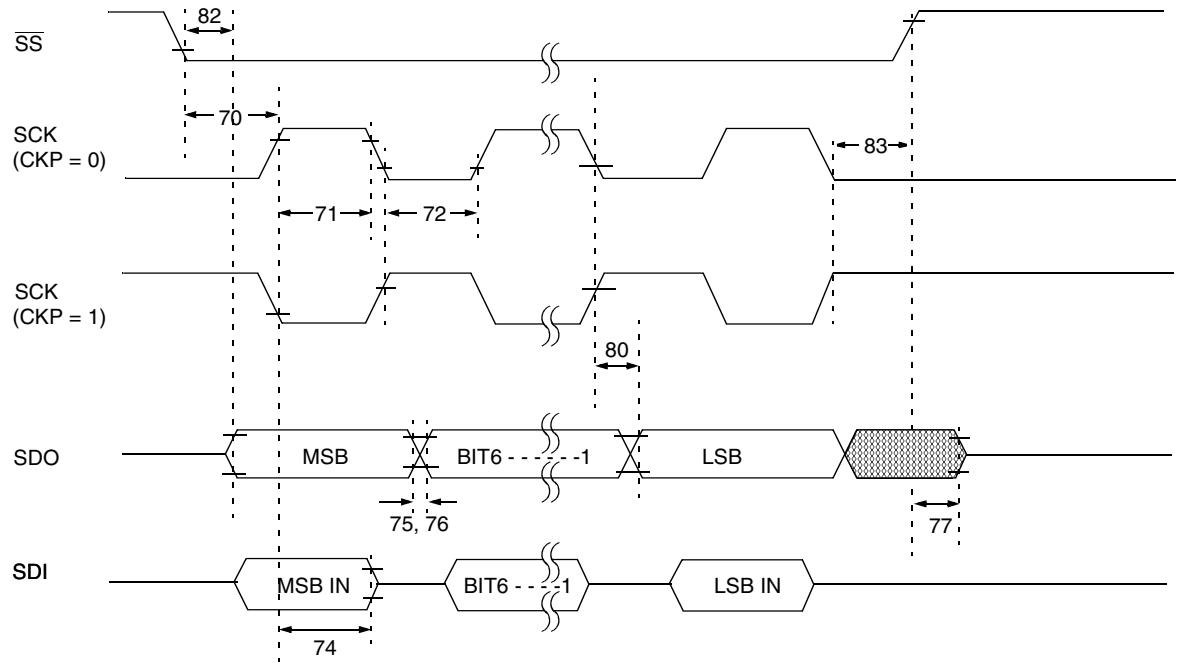

Refer to Figure 13-1 for load conditions.

 © 1998-2013 Microchip Technology Inc.

TABLE 13-8 SPI SLAVE MODE REQUIREMENTS (CKE=0) - PIC16C72

Param No.	Sym	Characteristic	Min	Typ†	Max	Units	Conditions
70	TssL2scH, TssL2scL	SS↓ to SCK↓ or SCK↑ input	TCY	—	—	ns	
71	TscH	SCK input high time (slave mode)	TCY + 20	—	—	ns	
72	TscL	SCK input low time (slave mode)	TCY + 20	—	—	ns	
73	TdiV2scH, TdiV2scL	Setup time of SDI data input to SCK edge	50	—	—	ns	
74	TscH2diL, TscL2diL	Hold time of SDI data input to SCK edge	50	—	—	ns	
75	TdoR	SDO data output rise time	—	10	25	ns	
76	TdoF	SDO data output fall time	—	10	25	ns	
77	TssH2doZ	$\overline{SS}$↑ to SDO output hi-impedance	10	—	50	ns	
78	TscR	SCK output rise time (master mode)	—	10	25	ns	
79	TscF	SCK output fall time (master mode)	—	10	25	ns	
80	TscH2doV, TscL2doV	SDO data output valid after SCK edge	—	—	50	ns	

† Data in "Typ" column is at 5V, 25°C unless otherwise stated. These parameters are for design guidance only and are not tested.

TABLE 13-9 SPI MODE REQUIREMENTS - PIC16CR72

Parameter No.	Sym	Characteristic	Min	Typ†	Max	Units	Conditions
70*	TssL2scH, TssL2scL	$\overline{SS}$↓ to SCK↓ or SCK↑ input	TCY	—	—	ns	
71*	TscH	SCK input high time (slave mode)	TCY + 20	—	—	ns	
72*	TscL	SCK input low time (slave mode)	TCY + 20	—	—	ns	
73*	TdiV2scH, TdiV2scL	Setup time of SDI data input to SCK edge	100	—	—	ns	
74*	TscH2diL, TscL2diL	Hold time of SDI data input to SCK edge	100	—	—	ns	
75*	TdoR	SDO data output rise time	—	10	25	ns	
76*	TdoF	SDO data output fall time	—	10	25	ns	
77*	TssH2doZ	$\overline{SS}$↑ to SDO output hi-impedance	10	—	50	ns	
78*	TscR	SCK output rise time (master mode)	—	10	25	ns	
79*	TscF	SCK output fall time (master mode)	—	10	25	ns	
80*	TscH2doV, TscL2doV	SDO data output valid after SCK edge	—	—	50	ns	
81*	TdoV2scH, TdoV2scL	SDO data output setup to SCK edge	TCY	—	—	ns	
82*	TssL2doV	SDO data output valid after $\overline{SS}$↓ edge	—	—	50	ns	
83*	TscH2ssH, TscL2ssH	$\overline{SS}$ ↑ after SCK edge	1.5TCY + 40	—	—	ns	

* These parameters are characterized but not tested.

† Data in "Typ" column is at 5V, 25°C unless otherwise stated. These parameters are for design guidance only and are not tested.

FIGURE 13-12: I²C BUS START/STOP BITS TIMING

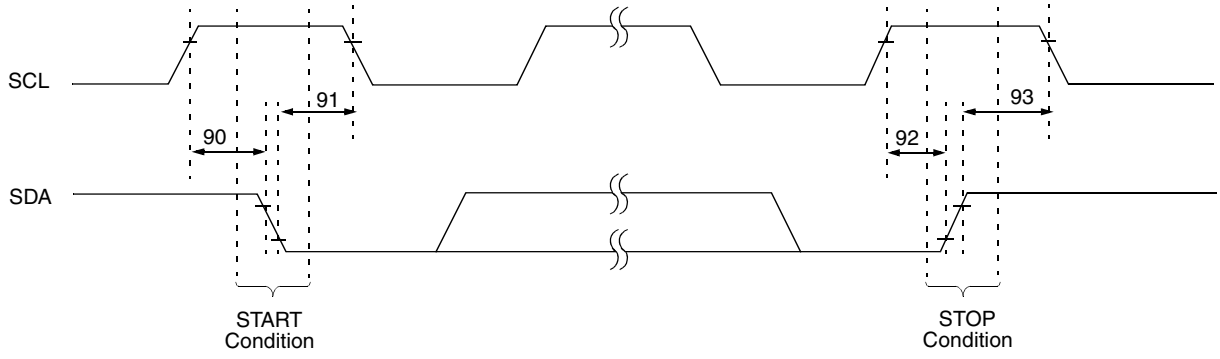

Note: Refer to Figure 13-1 for load conditions

TABLE 13-10 I²C BUS START/STOP BITS REQUIREMENTS

Parameter No.	Sym	Characteristic		Min	Typ	Max	Units	Conditions
90	TSU:STA	START condition Setup time	100 kHz mode	4700	—	—	ns	Only relevant for repeated START condition
			400 kHz mode	600	—	—		
91	THD:STA	START condition Hold time	100 kHz mode	4000	—	—	ns	After this period the first clock pulse is generated
			400 kHz mode	600	—	—		
92	TSU:STO	STOP condition Setup time	100 kHz mode	4700	—	—	ns	
			400 kHz mode	600	—	—		
93	THD:STO	STOP condition Hold time	100 kHz mode	4000	—	—	ns	
			400 kHz mode	600	—	—		

 © 1998-2013 Microchip Technology Inc.

FIGURE 13-13: I²C BUS DATA TIMING

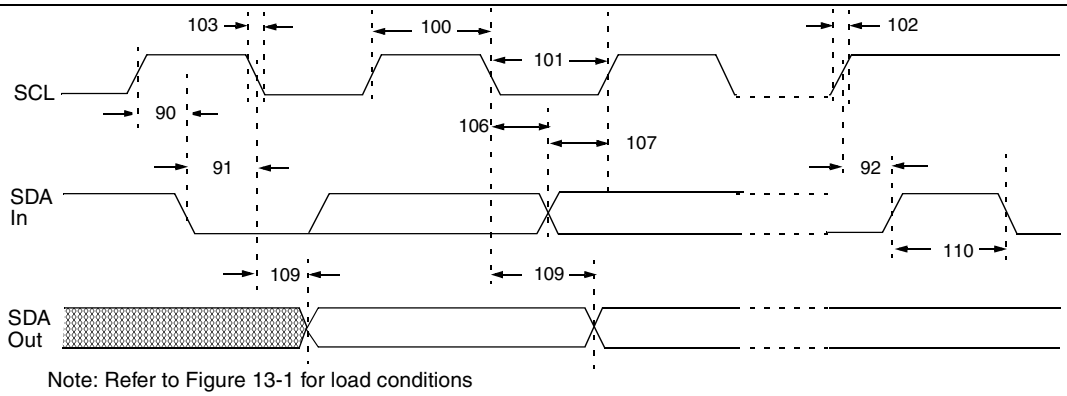

Note: Refer to Figure 13-1 for load conditions

TABLE 13-11 I²C BUS DATA REQUIREMENTS

Parameter No.	Sym	Characteristic		Min	Max	Units	Conditions
100	THIGH	Clock high time	100 kHz mode	4.0	—	μs	Device must operate at a minimum of 1.5 MHz
			400 kHz mode	0.6	—	μs	Device must operate at a minimum of 10 MHz
			SSP Module	1.5TCY	—		
101	TLOW	Clock low time	100 kHz mode	4.7	—	μs	Device must operate at a minimum of 1.5 MHz
			400 kHz mode	1.3	—	μs	Device must operate at a minimum of 10 MHz
			SSP Module	1.5TCY	—		
102	TR	SDA and SCL rise time	100 kHz mode	—	1000	ns	
			400 kHz mode	20 + 0.1Cb	300	ns	Cb is specified to be from 10 to 400 pF
103	TF	SDA and SCL fall time	100 kHz mode	—	300	ns	
			400 kHz mode	20 + 0.1Cb	300	ns	Cb is specified to be from 10 to 400 pF
90	TSU:STA	START condition setup time	100 kHz mode	4.7	—	μs	Only relevant for repeated START condition
			400 kHz mode	0.6	—	μs	
91	THD:STA	START condition hold time	100 kHz mode	4.0	—	μs	After this period the first clock pulse is generated
			400 kHz mode	0.6	—	μs	
106	THD:DAT	Data input hold time	100 kHz mode	0	—	ns	
			400 kHz mode	0	0.9	μs	
107	TSU:DAT	Data input setup time	100 kHz mode	250	—	ns	Note 2
			400 kHz mode	100	—	ns	
92	TSU:STO	STOP condition setup time	100 kHz mode	4.7	—	μs	
			400 kHz mode	0.6	—	μs	
109	TAA	Output valid from clock	100 kHz mode	—	3500	ns	Note 1
			400 kHz mode	—	—	ns	
110	TBUF	Bus free time	100 kHz mode	4.7	—	μs	Time the bus must be free before a new transmission can start
			400 kHz mode	1.3	—	μs	
	Cb	Bus capacitive loading		—	400	pF	

Note 1: As a transmitter, the device must provide this internal minimum delay time to bridge the undefined region (min. 300 ns) of the falling edge of SCL to avoid unintended generation of START or STOP conditions.

Note 2: A fast-mode (400 kHz) I²C-bus device can be used in a standard-mode (100 kHz)S I²C-bus system, but the requirement tsu;DAT ≥ 250 ns must then be met. This will automatically be the case if the device does not stretch the LOW period of the SCL signal. If such a device does stretch the LOW period of the SCL signal, it must output the next data bit to the SDA line TR max.+tsu;DAT = 1000 + 250 = 1250 ns (according to the standard-mode I²C bus specification) before the SCL line is released.

TABLE 13-12 A/D CONVERTER CHARACTERISTICS: PIC16C72/CR72-04 (Commercial, Industrial, Extended) PIC16C72/CR72-10 (Commercial, Industrial, Extended) PIC16C72/CR72-20 (Commercial, Industrial, Extended) PIC16LC72/LCR72-04 (Commercial, Industrial)

Param No.	Sym	Characteristic		Min	Typ†	Max	Units	Conditions
A01	NR	Resolution		—	—	8 bits	bit	VREF = VDD = 5.12V, VSS ≤ VAIN ≤ VREF
A02	EABS	Total Absolute error		—	—	< ± 1	LSb	VREF = VDD = 5.12V, VSS ≤ VAIN ≤ VREF
A03	EIL	Integral linearity error		—	—	< ± 1	LSb	VREF = VDD = 5.12V, VSS ≤ VAIN ≤ VREF
A04	EDL	Differential linearity error		—	—	< ± 1	LSb	VREF = VDD = 5.12V, VSS ≤ VAIN ≤ VREF
A05	EFS	Full scale error		—	—	< ± 1	LSb	VREF = VDD = 5.12V, VSS ≤ VAIN ≤ VREF
A06	EOFF	Offset error		—	—	< ± 1	LSb	VREF = VDD = 5.12V, VSS ≤ VAIN ≤ VREF
A10	—	Monotonicity		—	guaranteed	—	—	VSS ≤ VAIN ≤ VREF
A20	VREF	Reference voltage		2.5V	—	VDD + 0.3	V	
A25	VAIN	Analog input voltage		VSS - 0.3	—	VREF + 0.3	V	
A30	ZAIN	Recommended impedance of analog voltage source		—	—	10.0	kΩ	
A40	IAD	A/D conversion current (VDD)	PIC16**C**72/**CR**72	—	180	—	μA	Average current consumption when A/D is on. (Note 1)
			PIC16**LC**72/**LCR**72	—	90	—	μA	
A50	IREF	VREF input current (Note 2)		10	—	1000	μA	During VAIN acquisition. Based on differential of VHOLD to VAIN to charge CHOLD, see Section 9.1.
				—	—	10	μA	During A/D Conversion cycle

* These parameters are characterized but not tested.

† Data in "Typ" column is at 5V, 25°C unless otherwise stated. These parameters are for design guidance only and are not tested.

Note 1: When A/D is off, it will not consume any current other than minor leakage current. The power-down current spec includes any such leakage from the A/D module.

Note 2: VREF current is from RA3 pin or VDD pin, whichever is selected as reference input.

 © 1998-2013 Microchip Technology Inc.

FIGURE 13-14: A/D CONVERSION TIMING

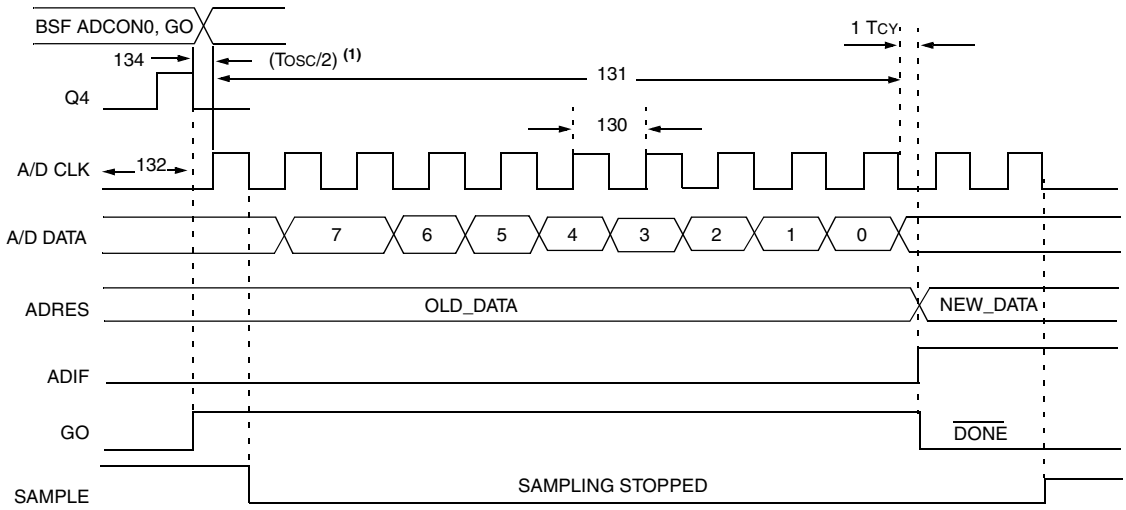

Note 1: If the A/D clock source is selected as RC, a time of TCY is added before the A/D clock starts. This allows the SLEEP instruction to be executed.

TABLE 13-13 A/D CONVERSION REQUIREMENTS

Param No.	Sym	Characteristic		Min	Typ†	Max	Units	Conditions
130	TAD	A/D clock period	PIC16**C**72/**LCR**72	1.6	—	—	μs	TOSC based, VREF ≥ 2.5V
			PIC16**LC**72/**LCR**72	2.0	—	—	μs	TOSC based, VREF full range
			PIC16**C**72/**LCR**72	2.0	4.0	6.0	μs	A/D RC Mode
			PIC16**LC**72/**LCR**72	2.5	6.0	9.0	μs	A/D RC Mode
131	TCNV	Conversion time (not including S/H time) (Note 1)		—	9.5	—	TAD	
132	TACQ	Acquisition time		Note 2	20	—	μs	
				5*	—	—	μs	The minimum time is the amplifier settling time. This may be used if the "new" input voltage has not changed by more than 1 LSb (i.e., 20.0 mV @ 5.12V) from the last sampled voltage (as stated on CHOLD).
134	Tgo	Q4 to A/D clock start		—	TOSC/2 §	—	—	If the A/D clock source is selected as RC, a time of TCY is added before the A/D clock starts. This allows the SLEEP instruction to be executed.
135	Tswc	Switching from convert → sample time		1.5 §	—	—	TAD	

* These parameters are characterized but not tested.

† Data in "Typ" column is at 5V, 25°C unless otherwise stated. These parameters are for design guidance only and are not tested.

§ This specification ensured by design.

Note 1: ADRES register may be read on the following TCY cycle.

Note 2: See Section 9.1 for min conditions.

NOTES:

 © 1998-2013 Microchip Technology Inc.

14.0 DC AND AC CHARACTERISTICS GRAPHS AND TABLES - PIC16C72

The graphs and tables provided in this section are for **design guidance** and are **not tested or guaranteed**.

In some graphs or tables, the data presented are **outside specified operating range** (i.e., outside specified VDD range). This is for **information only** and devices are guaranteed to operate properly only within the specified range.

The data presented in this section is a **statistical summary** of data collected on units from different lots over a period of time and matrix samples. 'Typical' represents the mean of the distribution at 25°C, while 'max' or 'min' represents (mean + 3σ) and (mean - 3σ) respectively, where σ is standard deviation.

FIGURE 14-1: TYPICAL IPD vs. VDD (WDT DISABLED, RC MODE)

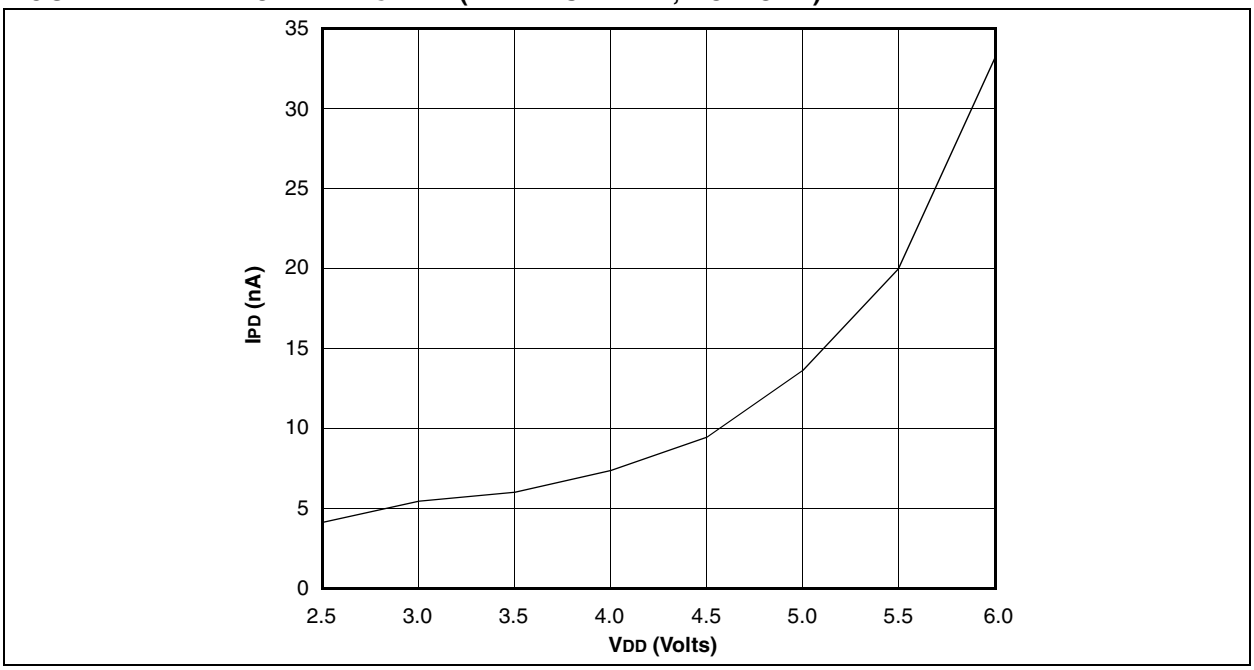

FIGURE 14-2: MAXIMUM IPD vs. VDD (WDT DISABLED, RC MODE)

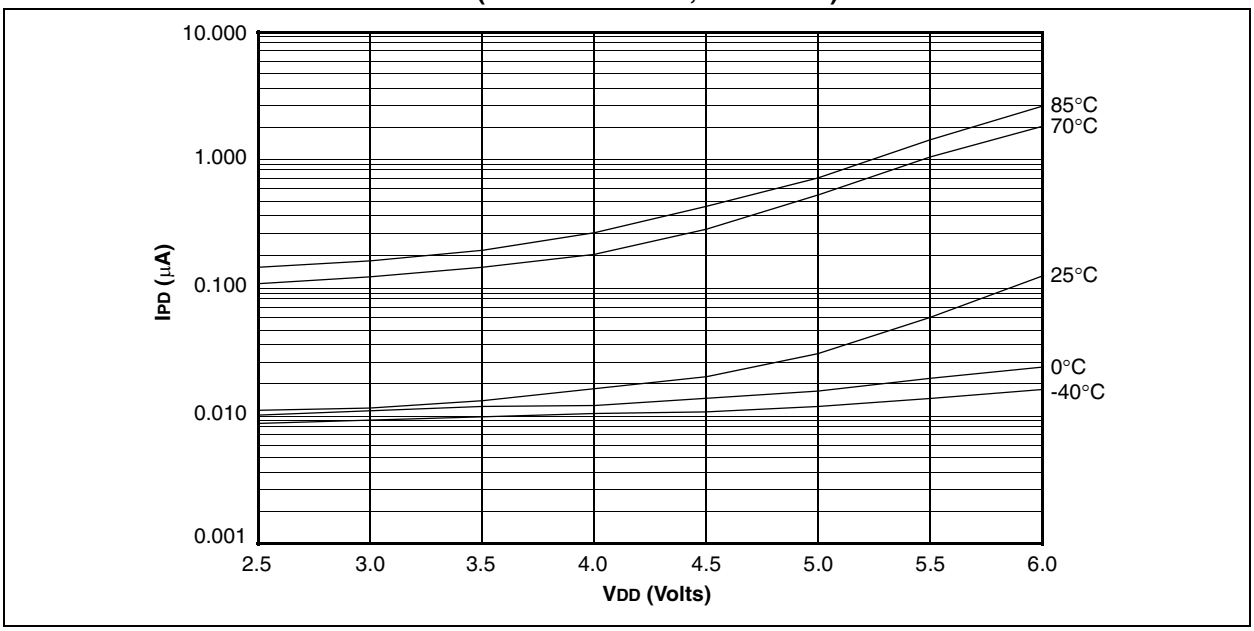

FIGURE 14-3: TYPICAL IPD vs. VDD @ 25°C (WDT ENABLED, RC MODE)

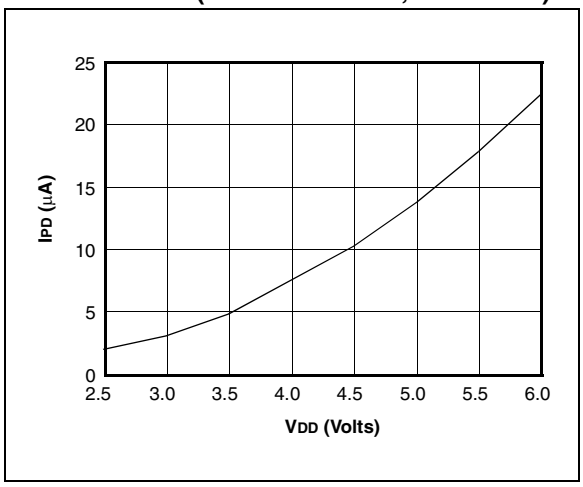

FIGURE 14-4: MAXIMUM IPD vs. VDD (WDT ENABLED, RC MODE)

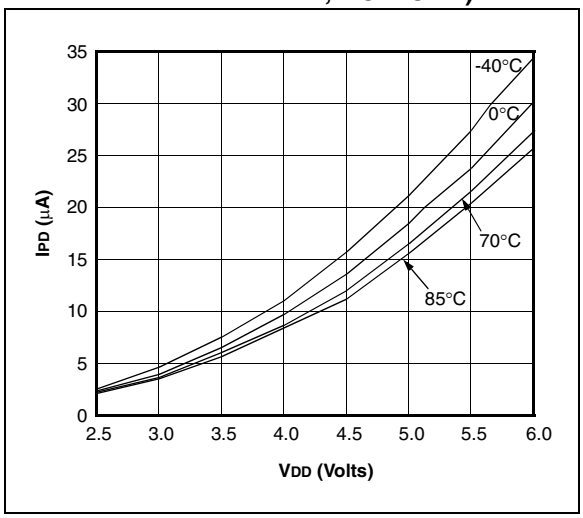

FIGURE 14-5: TYPICAL RC OSCILLATOR FREQUENCY vs. VDD

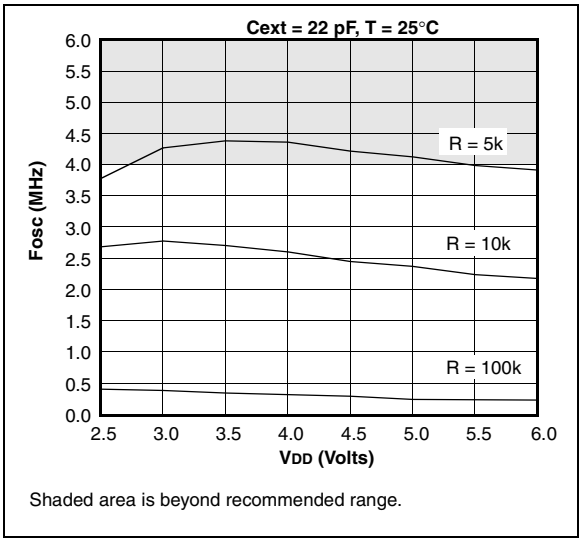

FIGURE 14-6: TYPICAL RC OSCILLATOR FREQUENCY vs. VDD

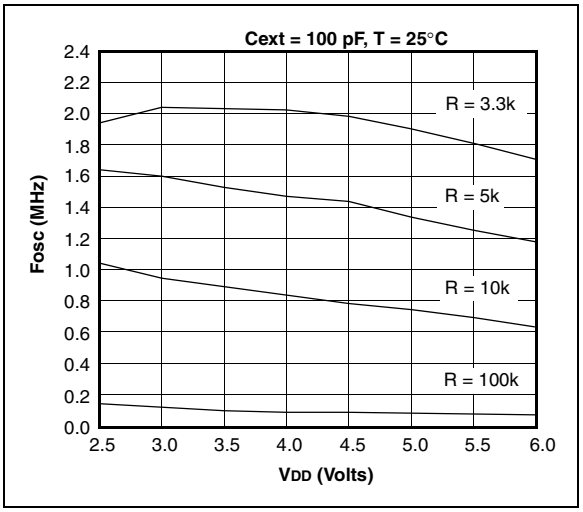

FIGURE 14-7: TYPICAL RC OSCILLATOR FREQUENCY vs. VDD

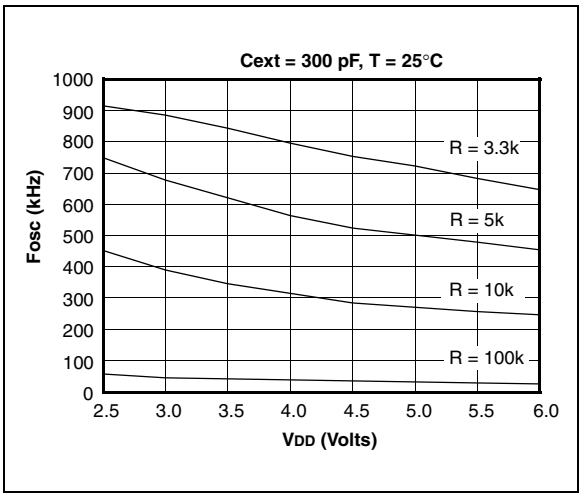

Data based on matrix samples. See first page of this section for details.

 © 1998-2013 Microchip Technology Inc.

FIGURE 14-8: TYPICAL IPD vs. VDD BROWN-OUT DETECT ENABLED (RC MODE)

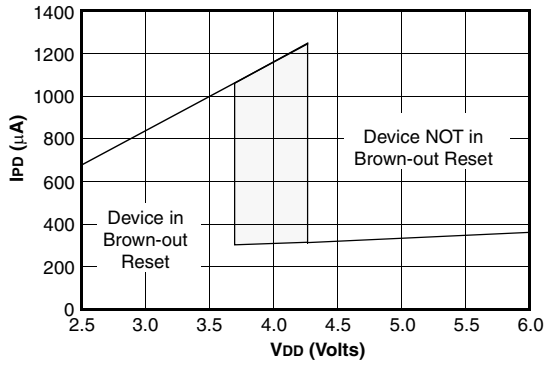

The shaded region represents the built-in hysteresis of the brown-out reset circuitry.

FIGURE 14-9: MAXIMUM IPD vs. VDD BROWN-OUT DETECT ENABLED (85°C TO -40°C, RC MODE)

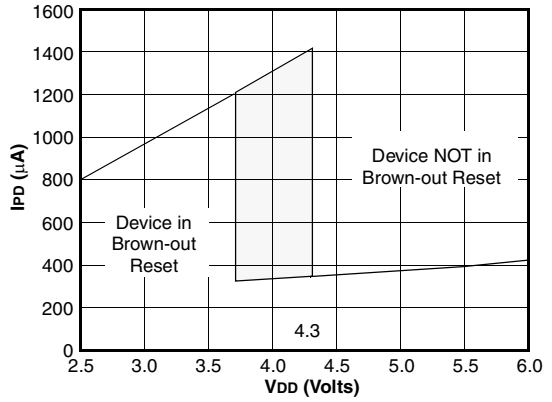

The shaded region represents the built-in hysteresis of the brown-out reset circuitry.

FIGURE 14-10: TYPICAL IPD vs. TIMER1 ENABLED (32 kHz, RC0/RC1 = 33 pF/33 pF, RC MODE)

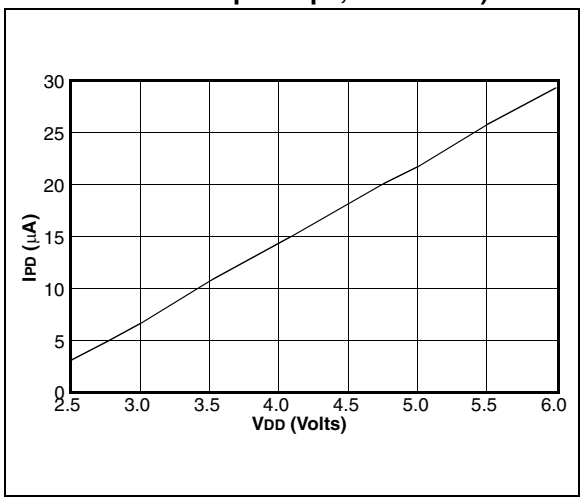

FIGURE 14-11: MAXIMUM IPD vs. TIMER1 ENABLED (32 kHz, RC0/RC1 = 33 pF/33 pF, 85°C TO -40°C, RC MODE)

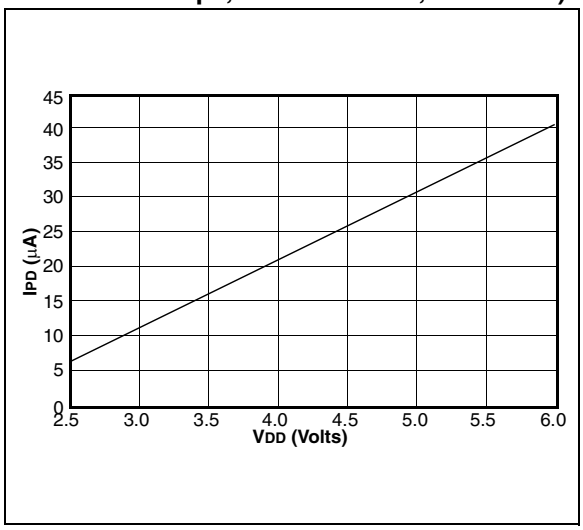

Data based on matrix samples. See first page of this section for details.

FIGURE 14-12: TYPICAL IDD vs. FREQUENCY (RC MODE @ 22 pF, 25°C)

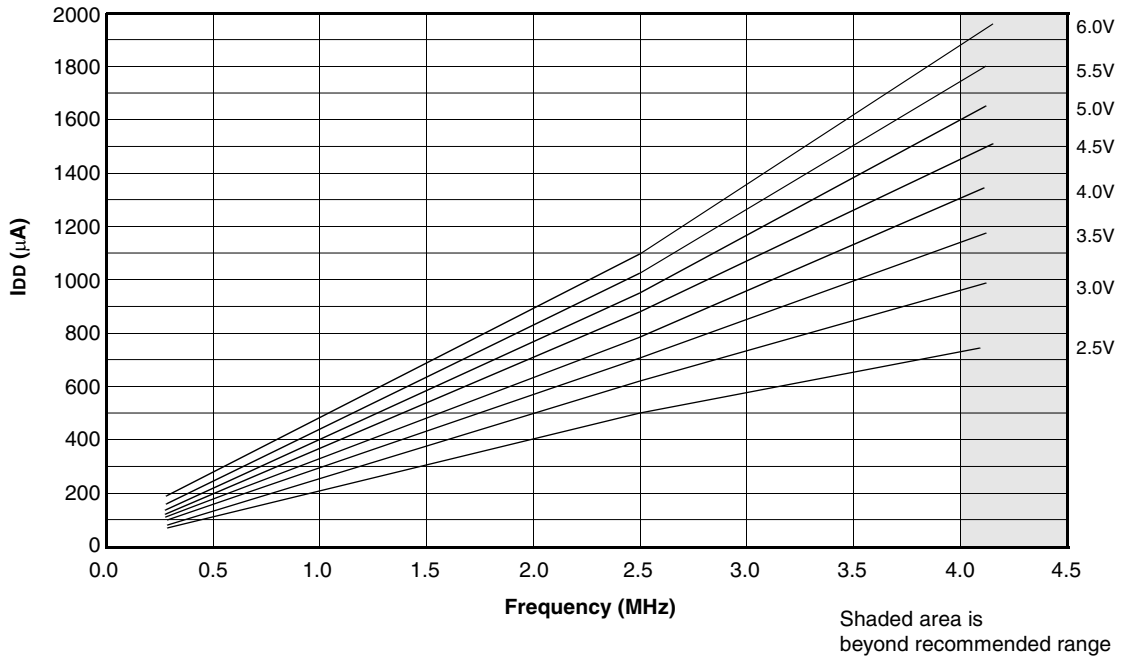

FIGURE 14-13: MAXIMUM IDD vs. FREQUENCY (RC MODE @ 22 pF, -40°C TO 85°C)

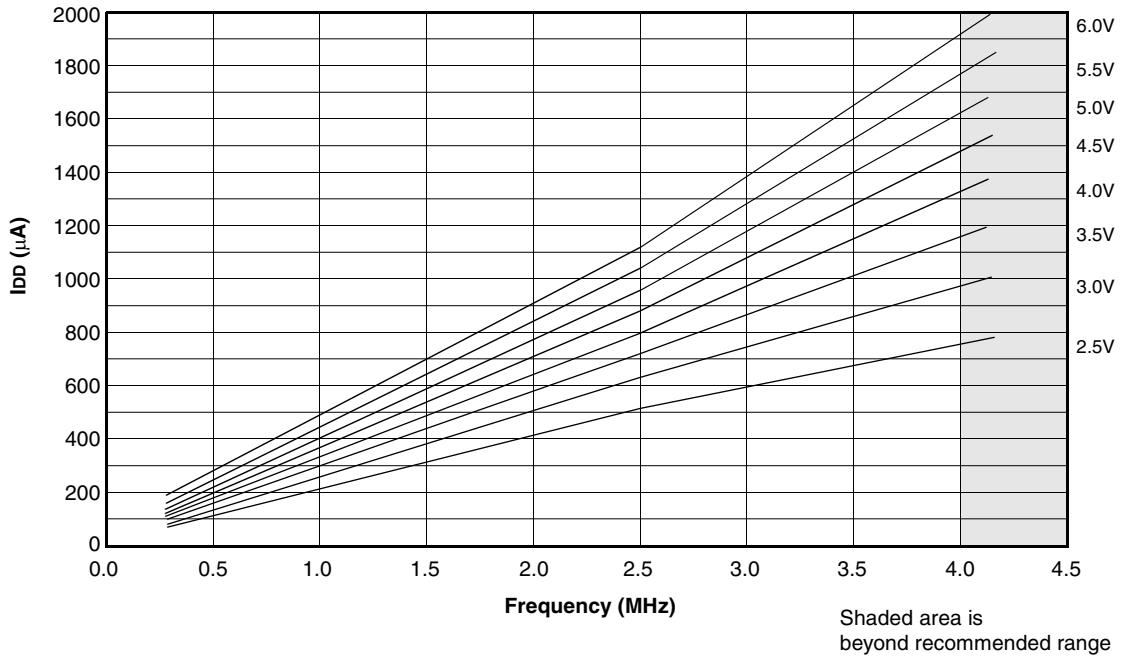

Data based on matrix samples. See first page of this section for details.

 © 1998-2013 Microchip Technology Inc.

FIGURE 14-14: TYPICAL IDD vs. FREQUENCY (RC MODE @ 100 pF, 25°C)

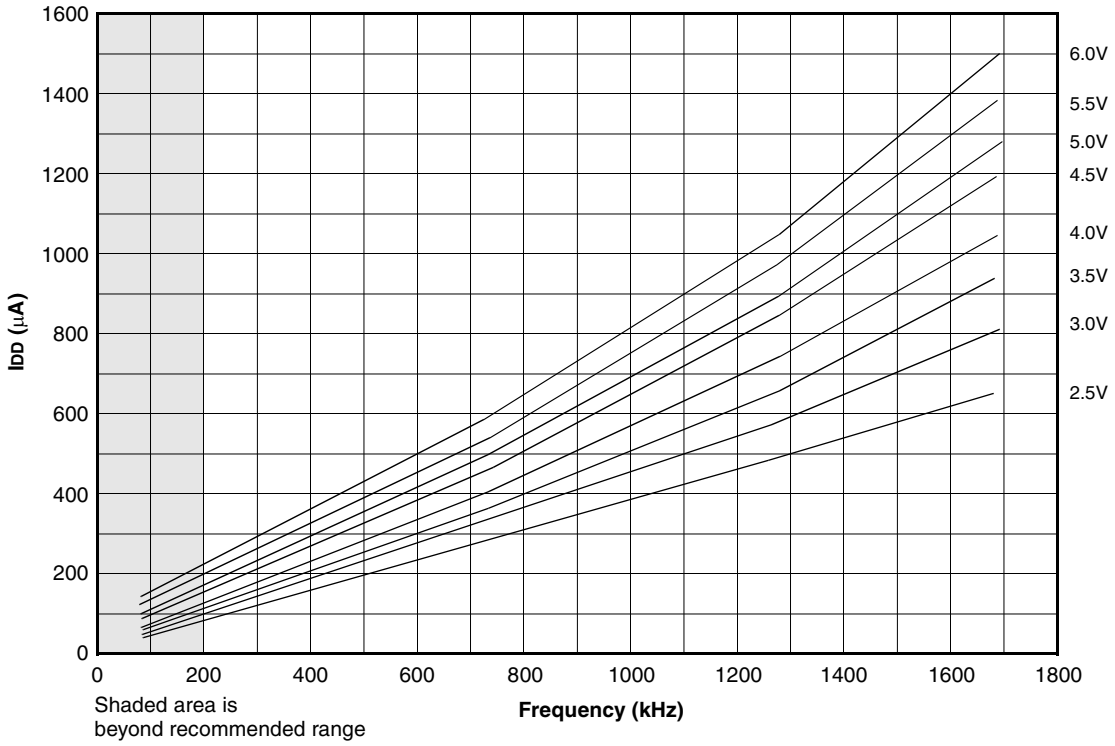

FIGURE 14-15: MAXIMUM IDD vs. FREQUENCY (RC MODE @ 100 pF, -40°C TO 85°C)

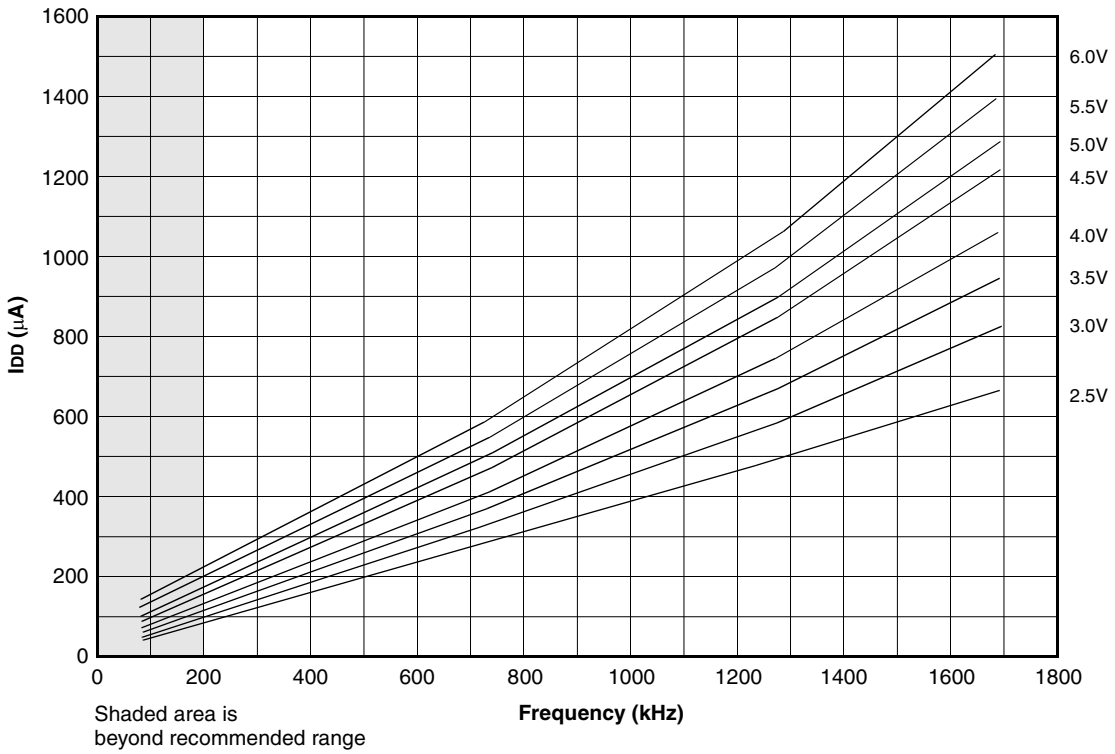

Data based on matrix samples. See first page of this section for details.

FIGURE 14-16: TYPICAL IDD vs. FREQUENCY (RC MODE @ 300 pF, 25°C)

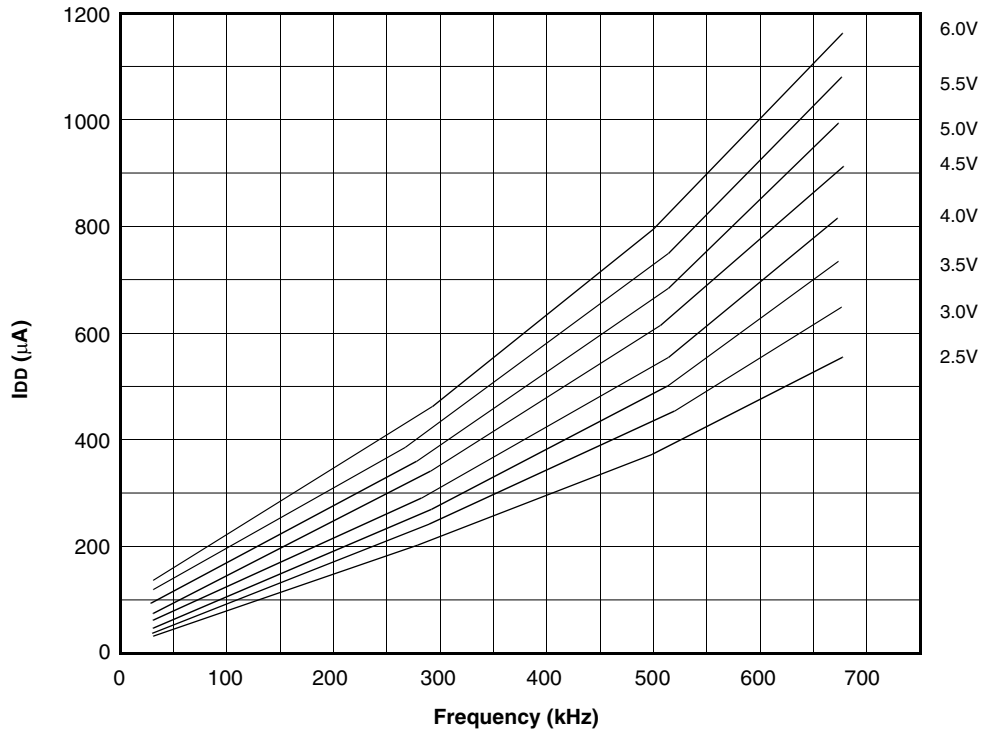

FIGURE 14-17: MAXIMUM IDD vs. FREQUENCY (RC MODE @ 300 pF, -40°C TO 85°C)

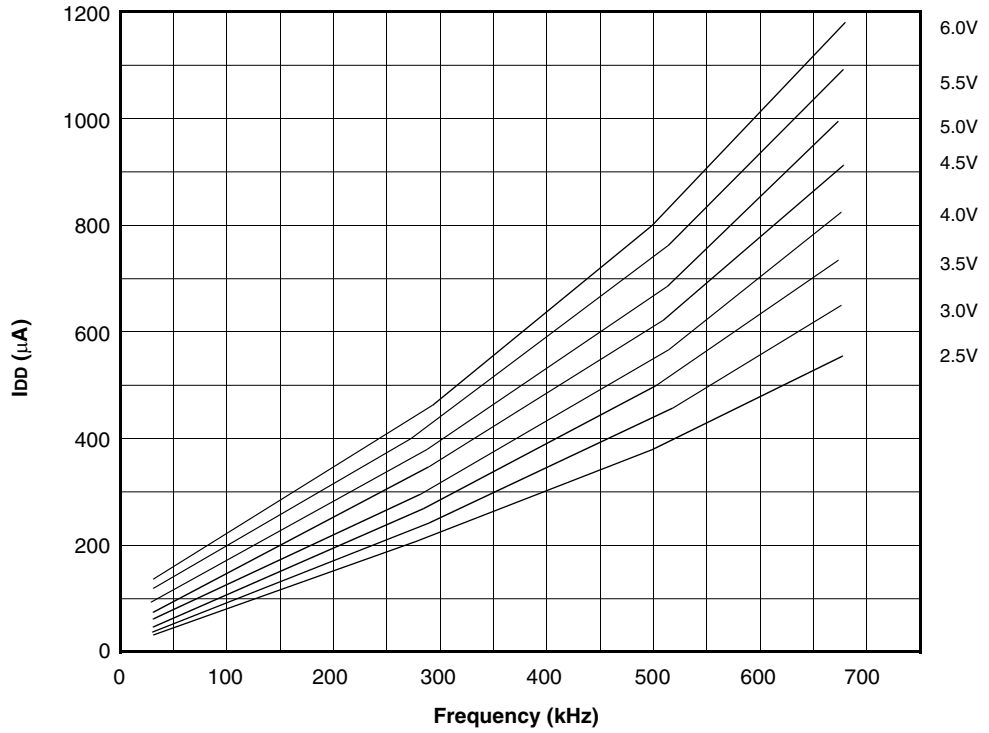

Data based on matrix samples. See first page of this section for details.

 © 1998-2013 Microchip Technology Inc.

FIGURE 14-18: TYPICAL IDD vs. CAPACITANCE @ 500 kHz (RC MODE)

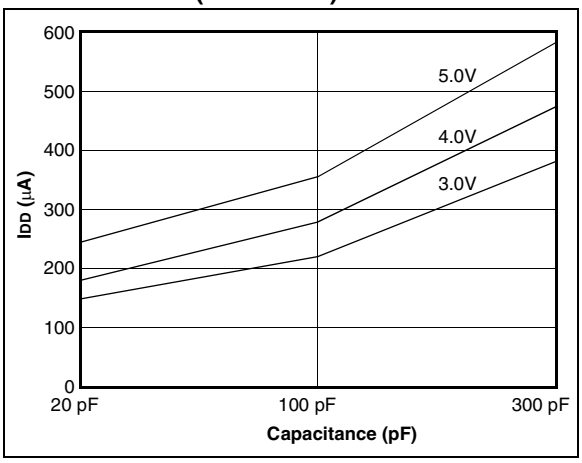

TABLE 14-1 RC OSCILLATOR FREQUENCIES

Cext	Rext	Average Fosc @ 5V, 25°C	
22 pF	5k	4.12 MHz	± 1.4%
	10k	2.35 MHz	± 1.4%
	100k	268 kHz	± 1.1%
100 pF	3.3k	1.80 MHz	± 1.0%
	5k	1.27 MHz	± 1.0%
	10k	688 kHz	± 1.2%
	100k	77.2 kHz	± 1.0%
300 pF	3.3k	707 kHz	± 1.4%
	5k	501 kHz	± 1.2%
	10k	269 kHz	± 1.6%
	100k	28.3 kHz	± 1.1%

The percentage variation indicated here is part to part variation due to normal process distribution. The variation indicated is ±3 standard deviation from average value for VDD = 5V.

FIGURE 14-19: TRANSCONDUCTANCE(gm) OF HS OSCILLATOR vs. VDD

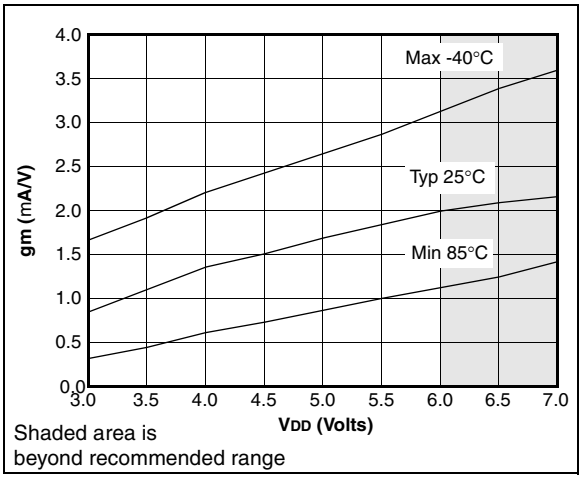

FIGURE 14-20: TRANSCONDUCTANCE(gm) OF LP OSCILLATOR vs. VDD

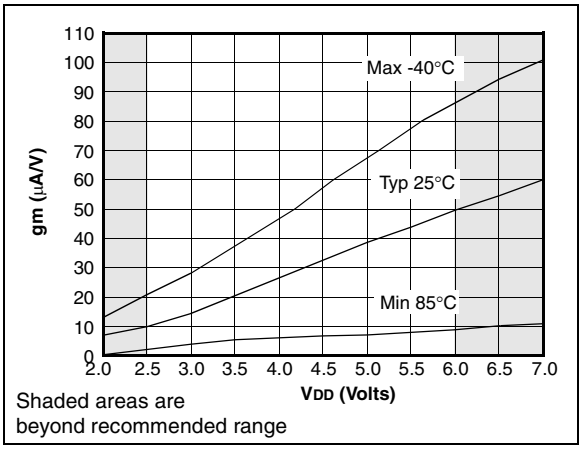

FIGURE 14-21: TRANSCONDUCTANCE(gm) OF XT OSCILLATOR vs. VDD

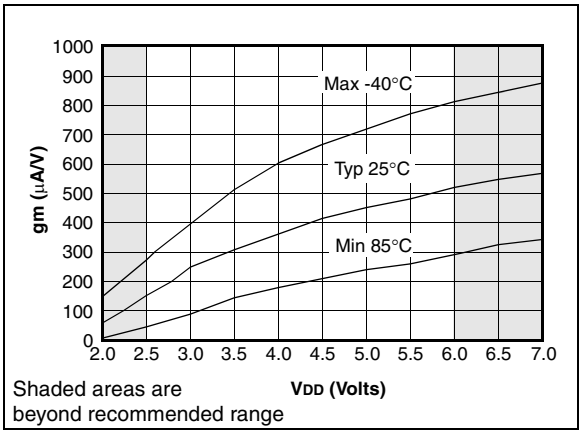

Data based on matrix samples. See first page of this section for details.

FIGURE 14-22: TYPICAL XTAL STARTUP TIME vs. VDD (LP MODE, 25°C)

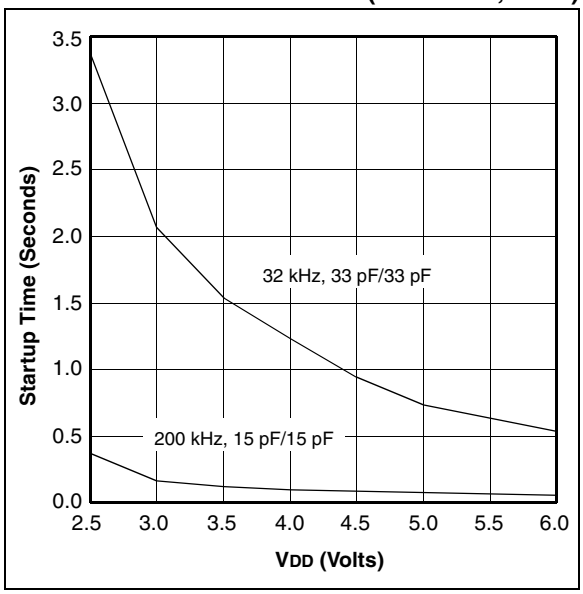

FIGURE 14-23: TYPICAL XTAL STARTUP TIME vs. VDD (HS MODE, 25°C)

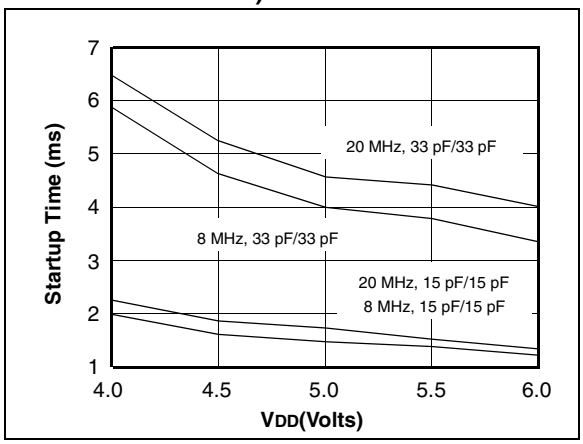

FIGURE 14-24: TYPICAL XTAL STARTUP TIME vs. VDD (XT MODE, 25°C)

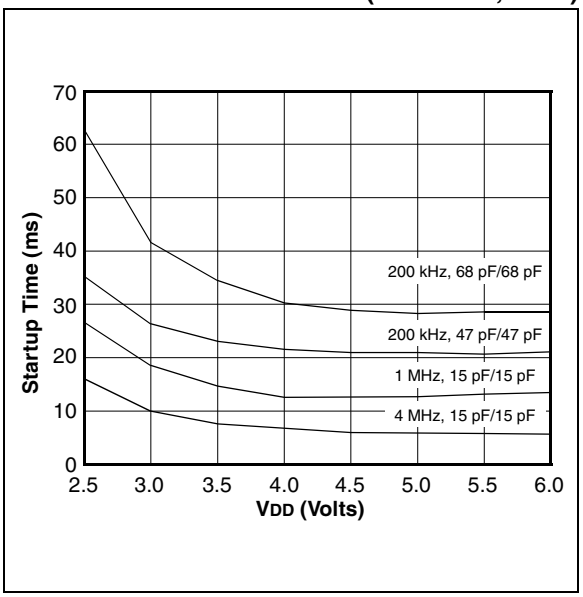

TABLE 14-2 CAPACITOR SELECTION FOR CRYSTAL OSCILLATORS

Osc Type	Crystal Freq	Cap. Range C1	Cap. Range C2
LP	32 kHz	33 pF	33 pF
	200 kHz	15 pF	15 pF
XT	200 kHz	47-68 pF	47-68 pF
	1 MHz	15 pF	15 pF
	4 MHz	15 pF	15 pF
HS	4 MHz	15 pF	15 pF
	8 MHz	15-33 pF	15-33 pF
	20 MHz	15-33 pF	15-33 pF
Crystals Used			
32 kHz	Epson C-001R32.768K-A		± 20 PPM
200 kHz	STD XTL 200.000KHz		± 20 PPM
1 MHz	ECS ECS-10-13-1		± 50 PPM
4 MHz	ECS ECS-40-20-1		± 50 PPM
8 MHz	EPSON CA-301 8.000M-C		± 30 PPM
20 MHz	EPSON CA-301 20.000M-C		± 30 PPM

Data based on matrix samples. See first page of this section for details.

 © 1998-2013 Microchip Technology Inc.

FIGURE 14-25: TYPICAL IDD vs. FREQUENCY (LP MODE, 25°C)

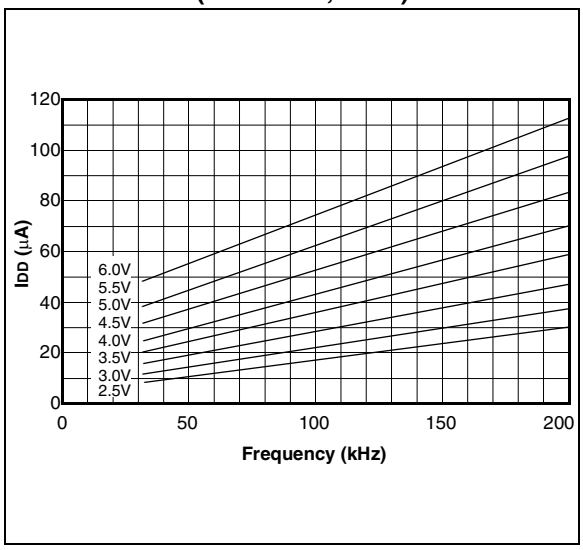

FIGURE 14-26: MAXIMUM IDD vs. FREQUENCY (LP MODE, 85°C TO -40°C)

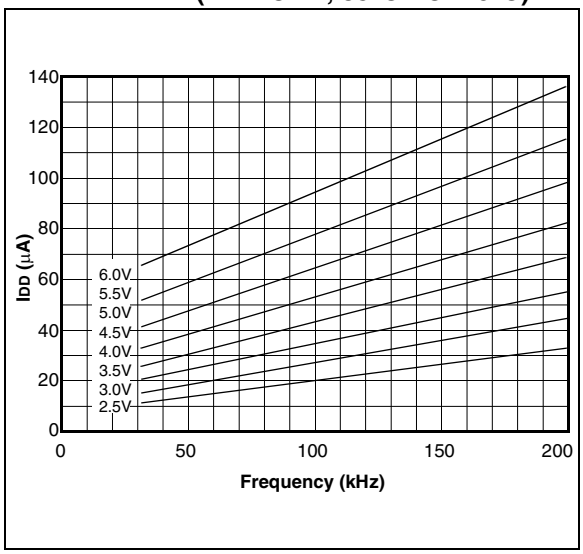

FIGURE 14-27: TYPICAL IDD vs. FREQUENCY (XT MODE, 25°C)

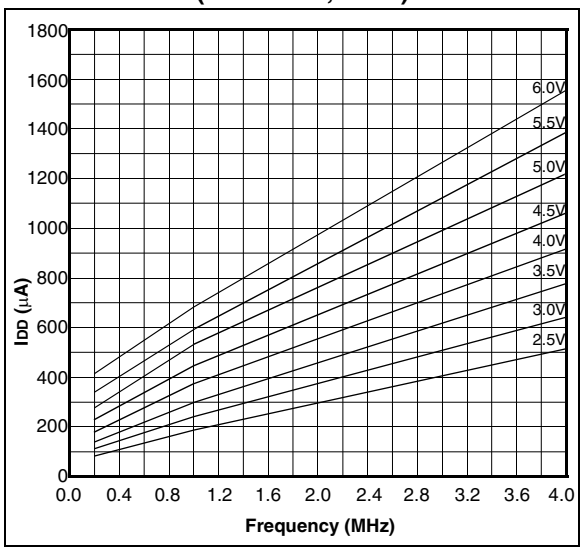

FIGURE 14-28: MAXIMUM IDD vs. FREQUENCY (XT MODE, -40°C TO 85°C)

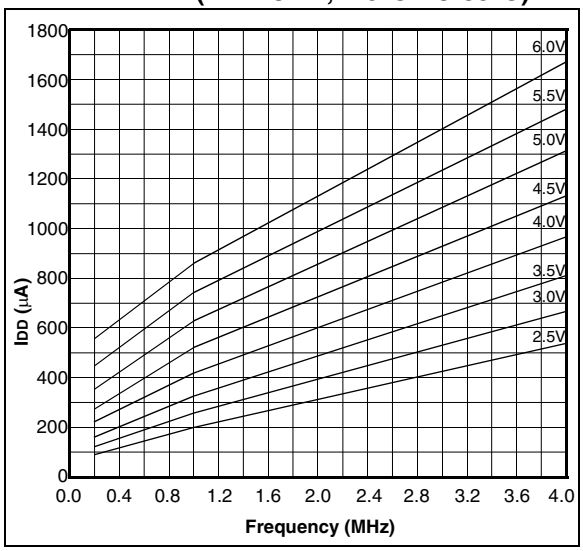

Data based on matrix samples. See first page of this section for details.

FIGURE 14-29: TYPICAL IDD vs. FREQUENCY (HS MODE, 25°C)

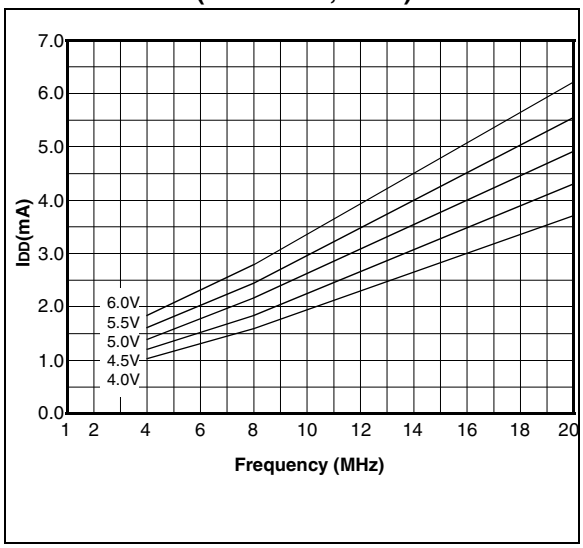

FIGURE 14-30: MAXIMUM IDD vs. FREQUENCY (HS MODE, -40°C TO 85°C)

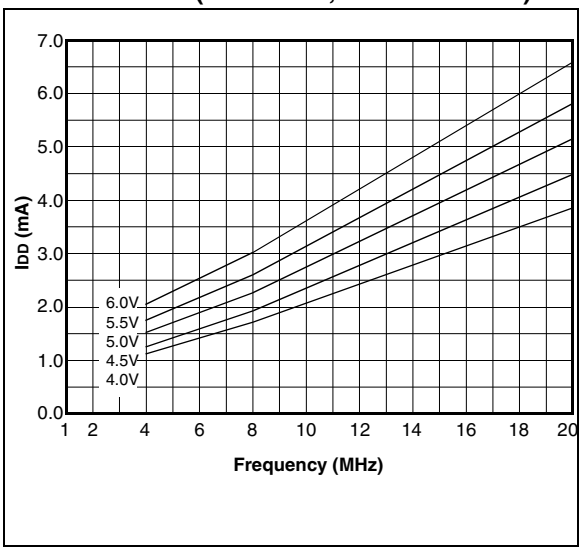

TABLE 14-3 TYPICAL EPROM ERASE TIME RECOMMENDATIONS

Process Technology	Wavelength (Angstroms)	Intensity (μW/cm2)	Distance from UV lamp (inches)	Typical Time (1) (minutes)
57K	2537	12,000	1	15 - 20
77K	2537	12,000	1	20
90K	2537	12,000	1	40
120K	2537	12,000	1	60

Note 1: If these criteria are not met, the erase times will be different.

Note: Fluorescent lights and sunlight both emit ultraviolet light at the erasure wavelength. Leaving a UV erasable device's window uncovered could cause, over time, the devices memory cells to become erased. The erasure time for a fluorescent light is about three years. While sunlight requires only about one week. To prevent the memory cells from losing data an opaque label should be placed over the erasure window.

Data based on matrix samples. See first page of this section for details.

 © 1998-2013 Microchip Technology Inc.

15.0 DC AND AC CHARACTERISTICS GRAPHS AND TABLES - PIC16CR72

NO GRAPHS OR TABLES AVAILABLE AT THIS TIME

NOTES:

 © 1998-2013 Microchip Technology Inc.

16.0 PACKAGING INFORMATION

16.1 Package Marking Information

28-Lead Side Brazed Skinny Windowed

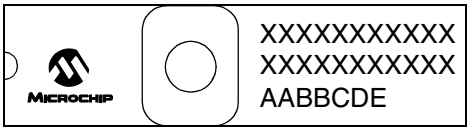

Example

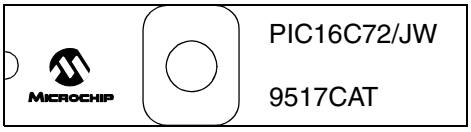

28-Lead PDIP (Skinny DIP)

Example

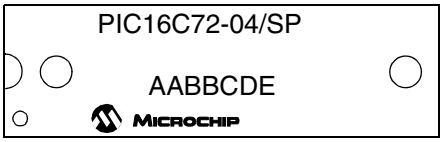

28-Lead SOIC

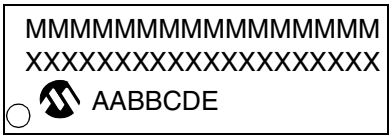

Example

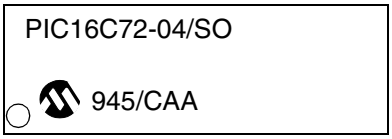

28-Lead SSOP

Example

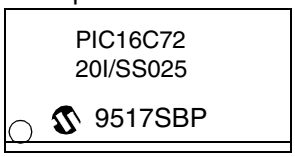

Legend:	XX...X	Customer-specific information
	Y	Year code (last digit of calendar year)
	YY	Year code (last 2 digits of calendar year)
	WW	Week code (week of January 1 is week ‘01’)
	NNN	Alphanumeric traceability code
	(e3)	Pb-free JEDEC designator for Matte Tin (Sn)
	*	This package is Pb-free. The Pb-free JEDEC designator ((e3)) can be found on the outer packaging for this package.

Note: In the event the full Microchip part number cannot be marked on one line, it will be carried over to the next line, thus limiting the number of available characters for customer-specific information.

16.2 28-Lead Ceramic Side Brazed Dual In-Line with Window (300 mil)(JW)

Note: For the most current package drawings, please see the Microchip Packaging Specification located at http://www.microchip.com/packaging

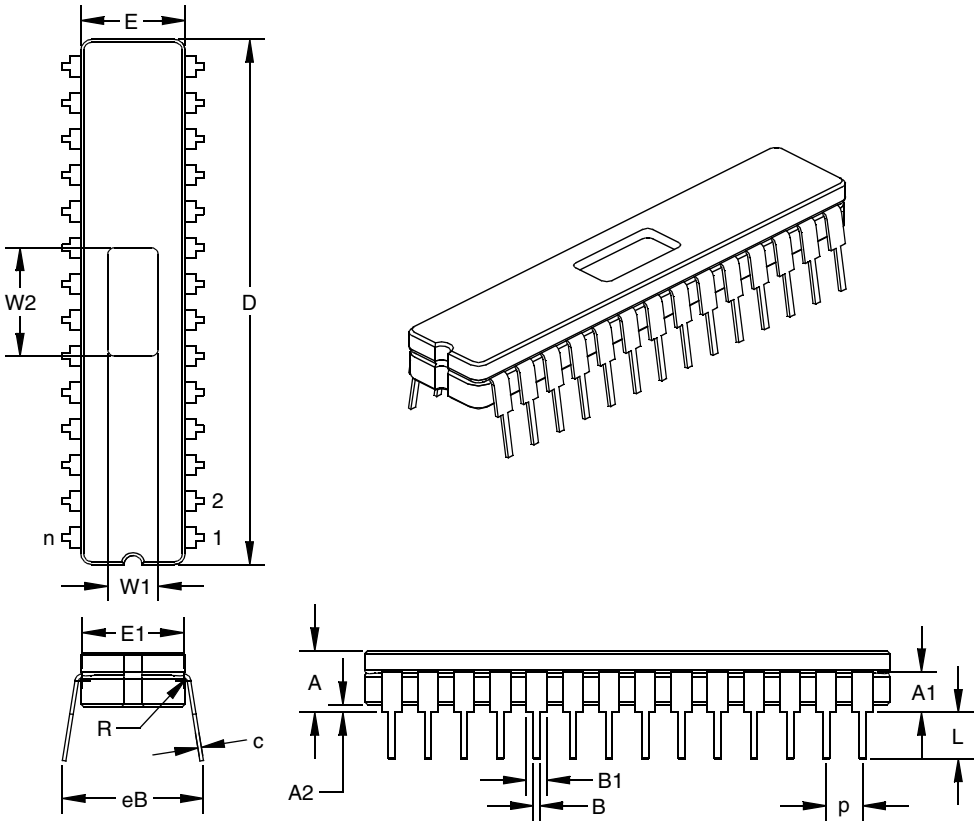

Units		INCHES*			MILLIMETERS		
Dimension Limits		MIN	NOM	MAX	MIN	NOM	MAX
PCB Row Spacing			0.300			7.62	
Number of Pins	n		28			28	
Pitch	p	0.098	0.100	0.102	2.49	2.54	2.59
Lower Lead Width	B	0.016	0.019	0.021	0.41	0.47	0.53
Upper Lead Width	B1	0.050	0.058	0.065	1.27	1.46	1.65
Shoulder Radius	R	0.010	0.013	0.015	0.25	0.32	0.38
Lead Thickness	c	0.008	0.010	0.012	0.20	0.25	0.30
Top to Seating Plane	A	0.170	0.183	0.195	4.32	4.64	4.95
Top of Lead to Seating Plane	A1	0.107	0.125	0.143	2.72	3.18	3.63
Base to Seating Plane	A2	0.015	0.023	0.030	0.00	0.57	0.76
Tip to Seating Plane	L	0.135	0.140	0.145	3.43	3.56	3.68
Package Length	D	1.430	1.458	1.485	36.32	37.02	37.72
Package Width	E	0.285	0.290	0.295	7.24	7.37	7.49
Radius to Radius Width	E1	0.255	0.270	0.285	6.48	6.86	7.24
Overall Row Spacing	eB	0.345	0.385	0.425	8.76	9.78	10.80
Window Width	W1	0.130	0.140	0.150	0.13	0.14	0.15
Window Length	W2	0.290	0.300	0.310	0.29	0.3	0.31

* Controlling Parameter.

 © 1998-2013 Microchip Technology Inc.

16.3 28-Lead Plastic Dual In-line (300 mil) (SP)

Note: For the most current package drawings, please see the Microchip Packaging Specification located at http://www.microchip.com/packaging

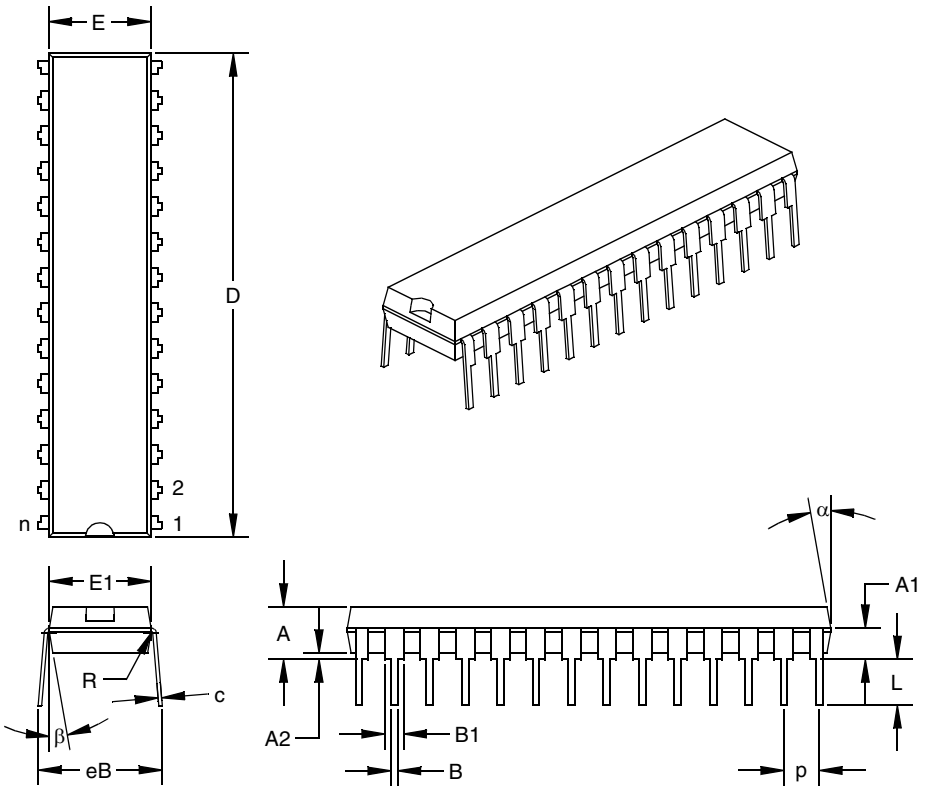

Units		INCHES*			MILLIMETERS		
Dimension Limits		MIN	NOM	MAX	MIN	NOM	MAX
PCB Row Spacing			0.300			7.62	
Number of Pins	n		28			28	
Pitch	p		0.100			2.54	
Lower Lead Width	B	0.016	0.019	0.022	0.41	0.48	0.56
Upper Lead Width	B1†	0.040	0.053	0.065	1.02	1.33	1.65
Shoulder Radius	R	0.000	0.005	0.010	0.00	0.13	0.25
Lead Thickness	c	0.008	0.010	0.012	0.20	0.25	0.30
Top to Seating Plane	A	0.140	0.150	0.160	3.56	3.81	4.06
Top of Lead to Seating Plane	A1	0.070	0.090	0.110	1.78	2.29	2.79
Base to Seating Plane	A2	0.015	0.020	0.025	0.38	0.51	0.64
Tip to Seating Plane	L	0.125	0.130	0.135	3.18	3.30	3.43
Package Length	D‡	1.345	1.365	1.385	34.16	34.67	35.18
Molded Package Width	E‡	0.280	0.288	0.295	7.11	7.30	7.49
Radius to Radius Width	E1	0.270	0.283	0.295	6.86	7.18	7.49
Overall Row Spacing	eB	0.320	0.350	0.380	8.13	8.89	9.65
Mold Draft Angle Top	α	5	10	15	5	10	15
Mold Draft Angle Bottom	β	5	10	15	5	10	15

* Controlling Parameter.

† Dimension “B1” does not include dam-bar protrusions. Dam-bar protrusions shall not exceed 0.003” (0.076 mm) per side or 0.006” (0.152 mm) more than dimension “B1.”

‡ Dimensions “D” and “E” do not include mold flash or protrusions. Mold flash or protrusions shall not exceed 0.010” (0.254 mm) per side or 0.020” (0.508 mm) more than dimensions “D” or “E.”

16.4 28-Lead Plastic Surface Mount (SOIC - Wide, 300 mil Body) (SO)

Note: For the most current package drawings, please see the Microchip Packaging Specification located at http://www.microchip.com/packaging

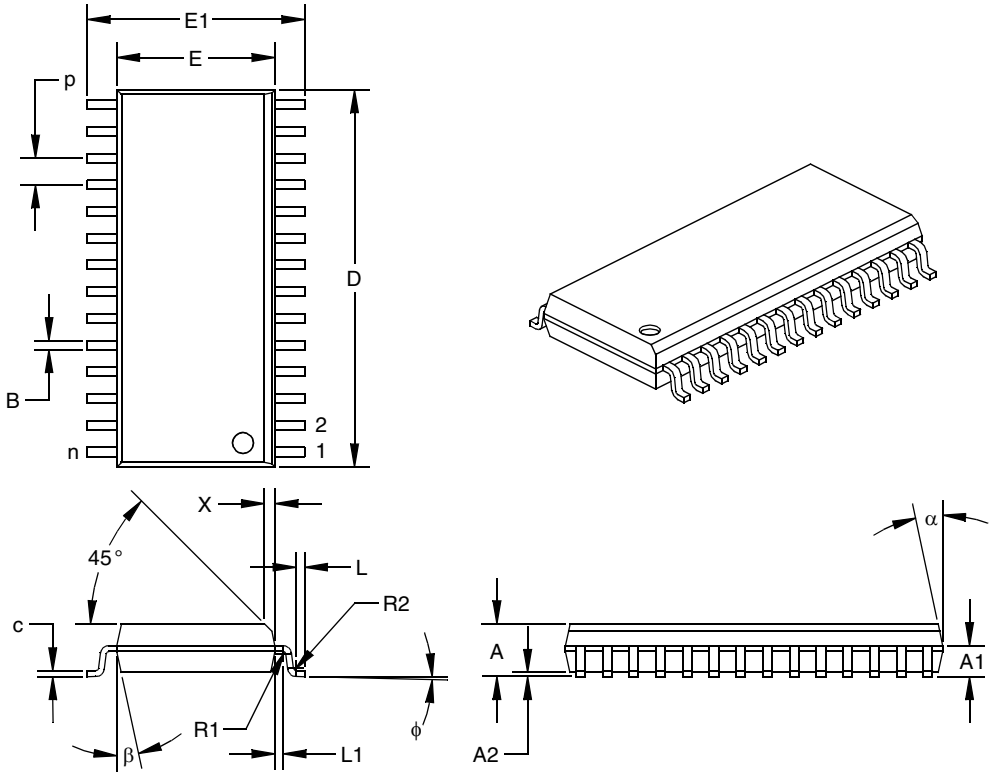

Units		INCHES*			MILLIMETERS		
Dimension Limits		MIN	NOM	MAX	MIN	NOM	MAX
Pitch	p		0.050			1.27	
Number of Pins	n		28			28	
Overall Pack. Height	A	0.093	0.099	0.104	2.36	2.50	2.64
Shoulder Height	A1	0.048	0.058	0.068	1.22	1.47	1.73
Standoff	A2	0.004	0.008	0.011	0.10	0.19	0.28
Molded Package Length	D‡	0.700	0.706	0.712	17.78	17.93	18.08
Molded Package Width	E‡	0.292	0.296	0.299	7.42	7.51	7.59
Outside Dimension	E1	0.394	0.407	0.419	10.01	10.33	10.64
Chamfer Distance	X	0.010	0.020	0.029	0.25	0.50	0.74
Shoulder Radius	R1	0.005	0.005	0.010	0.13	0.13	0.25
Gull Wing Radius	R2	0.005	0.005	0.010	0.13	0.13	0.25
Foot Length	L	0.011	0.016	0.021	0.28	0.41	0.53
Foot Angle	ϕ	0	4	8	0	4	8
Radius Centerline	L1	0.010	0.015	0.020	0.25	0.38	0.51
Lead Thickness	c	0.009	0.011	0.012	0.23	0.27	0.30
Lower Lead Width	B†	0.014	0.017	0.019	0.36	0.42	0.48
Mold Draft Angle Top	α	0	12	15	0	12	15
Mold Draft Angle Bottom	β	0	12	15	0	12	15

* Controlling Parameter.

† Dimension “B” does not include dam-bar protrusions. Dam-bar protrusions shall not exceed 0.003” (0.076 mm) per side or 0.006” (0.152 mm) more than dimension “B.”

‡ Dimensions “D” and “E” do not include mold flash or protrusions. Mold flash or protrusions shall not exceed 0.010” (0.254 mm) per side or 0.020” (0.508 mm) more than dimensions “D” or “E.”

 © 1998-2013 Microchip Technology Inc.

16.5 28-Lead Plastic Surface Mount (SSOP - 209 mil Body 5.30 mm) (SS)

Note: For the most current package drawings, please see the Microchip Packaging Specification located at http://www.microchip.com/packaging

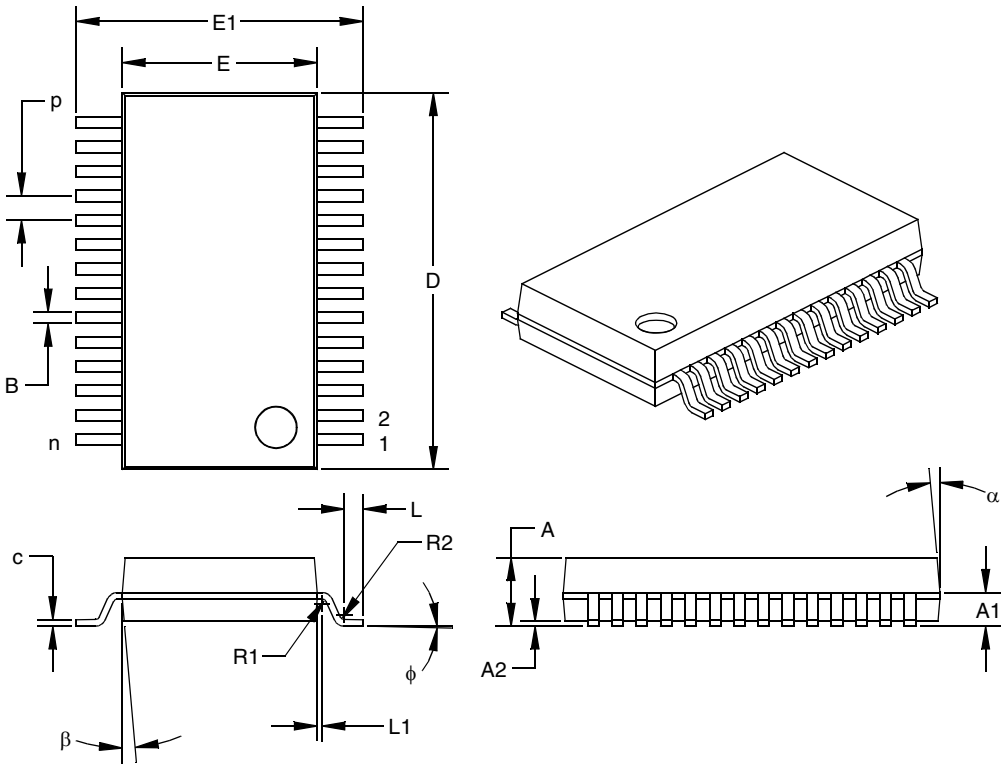

Units		INCHES			MILLIMETERS*		
Dimension Limits		MIN	NOM	MAX	MIN	NOM	MAX
Pitch	p		0.026			0.65	
Number of Pins	n		28			28	
Overall Pack. Height	A	0.068	0.073	0.078	1.73	1.86	1.99
Shoulder Height	A1	0.026	0.036	0.046	0.66	0.91	1.17
Standoff	A2	0.002	0.005	0.008	0.05	0.13	0.21
Molded Package Length	D‡	0.396	0.402	0.407	10.07	10.20	10.33
Molded Package Width	E‡	0.205	0.208	0.212	5.20	5.29	5.38
Outside Dimension	E1	0.301	0.306	0.311	7.65	7.78	7.90
Shoulder Radius	R1	0.005	0.005	0.010	0.13	0.13	0.25
Gull Wing Radius	R2	0.005	0.005	0.010	0.13	0.13	0.25
Foot Length	L	0.015	0.020	0.025	0.38	0.51	0.64
Foot Angle	ϕ	0	4	8	0	4	8
Radius Centerline	L1	0.000	0.005	0.010	0.00	0.13	0.25
Lead Thickness	c	0.005	0.007	0.009	0.13	0.18	0.22
Lower Lead Width	B†	0.010	0.012	0.015	0.25	0.32	0.38
Mold Draft Angle Top	α	0	5	10	0	5	10
Mold Draft Angle Bottom	β	0	5	10	0	5	10

* Controlling Parameter.

† Dimension “B” does not include dam-bar protrusions. Dam-bar protrusions shall not exceed 0.003” (0.076 mm) per side or 0.006” (0.152 mm) more than dimension “B.”

‡ Dimensions “D” and “E” do not include mold flash or protrusions. Mold flash or protrusions shall not exceed 0.010” (0.254 mm) per side or 0.020” (0.508 mm) more than dimensions “D” or “E.”

NOTES:

 © 1998-2013 Microchip Technology Inc.

APPENDIX A: WHAT'S NEW IN THIS DATA SHEET

This is a new data sheet. However, information on the PIC16C72 device was previously found in the PIC16C7X Data Sheet, DS30390. Information on the PIC16CR72 device is new.

APPENDIX B: WHAT'S CHANGED IN THIS DATA SHEET

Revision A (1998)

New data sheet.

Revision B (January 2013)

Added a note to each package outline drawing.

APPENDIX C: DEVICE DIFFERENCES

A table of the differences between the devices described in this document is found below.

Difference	PIC16C72	PIC16CR72
SSP module in SPI mode	Basic SSP	SSP

NOTES:

 © 1998-2013 Microchip Technology Inc.

INDEX

A

A/D
- ADCON0 Register 53
- ADCON1 Register 54
- ADIF bit 55
- Analog Input Model Block Diagram 56
- Analog-to-Digital Converter 53
- Block Diagram 55
- Configuring Analog Port Pins 57
- Configuring the Interrupt 55
- Configuring the Module 55
- Conversion Clock 57
- Conversions 58
- Converter Characteristics 94
- GO/$\overline{\text{DONE}}$ bit 55
- Internal Sampling Switch (Rss) Impedance 56
- Sampling Requirements 56
- Source Impedance 56
- Using the CCP Trigger 58

Absolute Maximum Ratings 77
$\overline{\text{ACK}}$ 47, 49
ADIE bit 12
ADIF bit 13
ADRES Register 7, 53, 55
Application Notes
- AN546 (Using the Analog-to-Digital Converter) 53
- AN578 (Use of the SSP Module in the I^2C Multi-Master Environment) 39

B

BF 40, 43, 47
Block Diagrams
- A/D 55
- Analog Input Model 56
- Capture 34
- Compare 35
- I^2C Mode 47
- On-Chip Reset Circuit 62
- PIC16C72 3
- PIC16CR72 3
- PORTC 23
- PWM 36
- RA3:RA0 and RA5 Port Pins 19
- RA4/T0CKI Pin 19
- RB3:RB0 Port Pins 21
- RB7:RB4 Port Pins 21
- SSP in I^2C Mode 47
- SSP in SPI Mode 42, 45
- Timer0 25
- Timer0/WDT Prescaler 26
- Timer2 31
- Watchdog Timer 70

$\overline{\text{BOR}}$ bit 14, 64
Buffer Full Status bit, BF 40, 43

C

C bit 9
Capture/Compare/PWM
- Capture
  - Block Diagram 34
  - CCP1CON Register 33
  - CCP1IF 34
  - CCPR1 34
  - CCPR1H:CCPR1L 34
  - Mode 34
  - Prescaler 34
- CCP Timer Resources 33
- Compare
  - Block Diagram 35
  - Mode 35
  - Software Interrupt Mode 35
  - Special Event Trigger 35
  - Special Trigger Output of CCP1 35
  - Special Trigger Output of CCP2 35
- Section 33
- Special Event Trigger and A/D Conversions 35

Capture/Compare/PWM (CCP)
- PWM Block Diagram 36
- PWM Mode 36
- PWM, Example Frequencies/Resolutions 37

CCP1IE bit 12
CCP1IF bit 13
CCPR1H Register 33
CCPR1L Register 33
CCPxM0 bit 33
CCPxM1 bit 33
CCPxM2 bit 33
CCPxM3 bit 33
CCPxX bit 33
CCPxY bit 33
CKE 43
CKP 41, 44
Clock Polarity Select bit, CKP 41, 44
Code Examples
- Changing Between Capture Prescalers 34
- Initializing PORTA 19
- Initializing PORTB 21
- Initializing PORTC 23

Code Protection 59, 72
Configuration Bits 59

D

D/$\overline{\text{A}}$ 40, 43
Data/Address bit, D/$\overline{\text{A}}$ 40, 43
DC bit 9
DC Characteristics
- PIC16C72 79

Development Support 75
Development Tools 75
Direct Addressing 17

E

Electrical Characteristics
- PIC16C72 77

External Power-on Reset Circuit 63

F

FSR Register 7, 8, 17
Fuzzy Logic Dev. System (*fuzzy*TECH®-MP) 75

G

GIE bit 68

I

I/O Ports
- PORTA 19
- PORTB 21
- PORTC 23
- Section 19

I^2C
- Addressing 48

Block Diagram 47
I²C Operation 47
Master Mode 51
Mode 47
Mode Selection 47
Multi-Master Mode 51
Reception 49
Reception Timing Diagram 49
SCL and SDA pins 47
Slave Mode 47
Transmission 50
In-Circuit Serial Programming 59, 72
INDF Register 8, 17
Indirect Addressing 17
Initialization Condition for all Register 65
Instruction Format 73
Instruction Set
Section 73
Summary Table 74
INT Interrupt 68
INTCON Register 11
INTEDG bit 10, 68
Internal Sampling Switch (Rss) Impedance 56
Interrupts 59
PortB Change 68
RB7:RB4 Port Change 21
Section 68
TMR0 68
IRP bit 9

L

Loading of PC 15

M

$\overline{\text{MCLR}}$ 61, 64
Memory
Data Memory 6
Program Memory 5
Program Memory Maps
PIC16C72 5
PIC16CR72 5
Register File Maps
PIC16C72 6
PIC16CR72 6
MPASM Assembler 75
MPSIM Software Simulator 75

O

OPCODE 73
OPTION Register 10
OSC selection 59
Oscillator
HS 60, 64
LP 60, 64
RC 60
XT 60, 64
Oscillator Configurations 60
Output of TMR2 31

P

P 40, 43
Packaging
28-Lead Ceramic w/Window 110
28-Lead PDIP 111
28-Lead SOIC 112
28-Lead SSOP 113
Paging, Program Memory 16
PCFG0 bit 54
PCFG1 bit 54
PCFG2 bit 54
PCL Register 7, 8, 15
PCLATH 65
PCLATH Register 7, 8, 15
PCON Register 14, 64
$\overline{\text{PD}}$ bit 9, 61
PICDEM-1 Low-Cost PIC16/17 Demo Board 75
PICDEM-2 Low-Cost PIC16CXX Demo Board 75
PICMASTER™ RT In-Circuit Emulator 75
PICSTART™ Low-Cost Development System 75
PIE1 Register 12
Pin Functions
$\overline{\text{MCLR}}$/Vpp 4
OSC1/CLKIN 4
OSC2/CLKOUT 4
RA0/AN0 4
RA1/AN1 4
RA2/AN2 4
RA3/AN3/Vref 4
RA4/T0CKI 4
RA5/AN4/$\overline{\text{SS}}$ 4
RB0/INT 4
RB1 4
RB2 4
RB3 4
RB4 4
RB5 4
RB6 4
RB7 4
RC0/T1OSO/T1CKI 4
RC1/T1OSI 4
RC2/CCP1 4
RC3/SCK/SCL 4
RC4/SDI/SDA 4
RC5/SDO 4
RC6 4
RC7 4
SCK ..... 42–??
SDI ..... 42–??
SDO ..... 42–??
$\overline{\text{SS}}$ ..... 42–??
Vdd 4
Vss 4
Pinout Descriptions
PIC16C72 4
PIC16CR72 4
PIR1 Register 13
POR 63, 64
Oscillator Start-up Timer (OST) 59, 63
Power Control Register (PCON) 64
Power-on Reset (POR) 59, 65
Power-up Timer (PWRT) 59
Power-Up-Timer (PWRT) 63
Time-out Sequence 64
$\overline{\text{TO}}$ 61
$\overline{\text{POR}}$ bit 14, 64
Port RB Interrupt 68
PORTA 65
PORTA Register 7, 19
PORTB 65
PORTB Register 7, 21
PORTC 65
PORTC Register 7, 23
Power-down Mode (SLEEP) 71

 © 1998-2013 Microchip Technology Inc.

PR2 Register 31
Prescaler, Switching Between Timer0 and WDT 26
PRO MATE™ Universal Programmer 75
Program Memory
    Paging 16
Program Memory Maps
    PIC16C72 5
    PIC16CR72 5
Program Verification 72
PS0 bit 10
PS1 bit 10
PS2 bit 10
PSA bit 10

R

R/$\overline{W}$ 40, 43
R/$\overline{W}$ bit 48, 49, 50
RBIF bit 21, 68
$\overline{RBPU}$ bit 10
RC Oscillator 61, 64
Read/Write bit Information, R/$\overline{W}$ 40, 43
Receive Overflow Detect bit, SSPOV 41
Receive Overflow Indicator bit, SSPOV 44
Register File 6
Registers
    Initialization Conditions 65
    Maps
        PIC16C72 6
        PIC16CR72 6
    Reset Conditions 64
    SSPCON
        Diagram 41
    SSPSTAT 43
        Diagram 40
        Section 40
Reset 59, 61
Reset Conditions for Special Registers 64
RP0 bit 6, 9
RP1 bit 9

S

S 40, 43
SCK 42
SCL 47
SDI 42
SDO 42
Slave Mode
    SCL 47
    SDA 47
SLEEP 59, 61
SMP 43
Special Event Trigger 58
Special Features of the CPU 59
Special Function Registers
    PIC16C72 7
    PIC16CR72 7
Special Function Registers, Section 7
SPI
    Block Diagram 42, 45
    Mode 42
    Serial Clock 45
    Serial Data In 45
    Serial Data Out 45
    Slave Select 45
    SPI Mode 45
    SSPCON 44
    SSPSTAT 43
SPI Clock Edge Select bit, CKE 43
SPI Data Input Sample Phase Select bit, SMP 43
SPI Mode 42
$\overline{SS}$ 42
SSP
    Module Overview 39
    Section 39
    SSPCON 44
    SSPSTAT 43
SSPADD Register 8
SSPCON 41, 44
SSPEN 41, 44
SSPIE bit 12
SSPIF bit 13
SSPM3:SSPM0 ..... 41, 44
SSPOV 41, 44, 47
SSPSTAT 40
SSPSTAT Register 8, 43
Stack 16
Start bit, S 40, 43
STATUS Register 9
Stop bit, P 40, 43
Synchronous Serial Port (SSP)
    Block Diagram, SPI Mode 42
    SPI Mode 42
Synchronous Serial Port Enable bit, SSPEN 41, 44
Synchronous Serial Port Mode Select bits,
SSPM3:SSPM0 ..... 41, 44
Synchronous Serial Port Module 39
Synchronous Serial Port Status Register 43

T

T0CS bit 10
T1CKPS0 bit 27
T1CKPS1 bit 27
T1CON Register 27
T1OSCEN bit 27
$\overline{T1SYNC}$ bit 27
T2CKPS0 bit 32
T2CKPS1 bit 32
T2CON Register 32
T_{AD} 57
Timer0
    RTCC 65
Timers
    Timer0
        Block Diagram 25
        Interrupt 26
        Prescaler 25
        Prescaler Block Diagram 26
        Section 25
        Switching Prescaler Assignment 26
        T0IF 68
        TMR0 Interrupt 68
    Timer1
        Capacitor Selection 29
        Oscillator 29
        Resetting Timer1 using a CCP Trigger Output .. 29
        T1CON 27
    Timer2
        Block Diagram 31
        Postscaler 31
        Prescaler 31
        T2CON 32

Timing Diagrams
A/D Conversion 95
Brown-out Reset 86
Capture/Compare/PWM 88
CLKOUT and I/O 85
External Clock Timing 84
I^2C Bus Data 93
I^2C Bus Start/Stop bits 92
I^2C Reception (7-bit Address) 49
Power-up Timer 86
Reset 86
Start-up Timer 86
Timer0 87
Timer1 87
Wake-up from Sleep via Interrupt 72
Watchdog Timer 86
TMR1CS bit 27
TMR1H Register 7
TMR1IE bit 12
TMR1IF bit 13
TMR1L Register 7
TMR1ON bit 27
TMR2 Register 7
TMR2IE bit 12
TMR2IF bit 13
TMR2ON bit 32
$\overline{TO}$ bit 9
TOUTPS0 bit 32
TOUTPS1 bit 32
TOUTPS2 bit 32
TOUTPS3 bit 32
TRISA Register 8, 19
TRISB Register 8, 21
TRISC Register 8, 23

U

UA 40, 43
Update Address bit, UA 40, 43

W

Wake-up from SLEEP 71
Watchdog Timer (WDT) 59, 61, 64, 70
WCOL 41, 44
WDT 64
Block Diagram 70
Timeout 65
Write Collision Detect bit, WCOL 41, 44

Z

Z bit 9

 © 1998-2013 Microchip Technology Inc.

THE MICROCHIP WEB SITE

Microchip provides online support via our WWW site at www.microchip.com. This web site is used as a means to make files and information easily available to customers. Accessible by using your favorite Internet browser, the web site contains the following information:

- **Product Support** – Data sheets and errata, application notes and sample programs, design resources, user's guides and hardware support documents, latest software releases and archived software
- **General Technical Support** – Frequently Asked Questions (FAQ), technical support requests, online discussion groups, Microchip consultant program member listing
- **Business of Microchip** – Product selector and ordering guides, latest Microchip press releases, listing of seminars and events, listings of Microchip sales offices, distributors and factory representatives

CUSTOMER CHANGE NOTIFICATION SERVICE

Microchip's customer notification service helps keep customers current on Microchip products. Subscribers will receive e-mail notification whenever there are changes, updates, revisions or errata related to a specified product family or development tool of interest.

To register, access the Microchip web site at www.microchip.com. Under "Support", click on "Customer Change Notification" and follow the registration instructions.

CUSTOMER SUPPORT

Users of Microchip products can receive assistance through several channels:

- Distributor or Representative
- Local Sales Office
- Field Application Engineer (FAE)
- Technical Support

Customers should contact their distributor, representative or field application engineer (FAE) for support. Local sales offices are also available to help customers. A listing of sales offices and locations is included in the back of this document.

Technical support is available through the web site at: http://microchip.com/support

READER RESPONSE

It is our intention to provide you with the best documentation possible to ensure successful use of your Microchip product. If you wish to provide your comments on organization, clarity, subject matter, and ways in which our documentation can better serve you, please FAX your comments to the Technical Publications Manager at (480) 792-4150.

Please list the following information, and use this outline to provide us with your comments about this document.

TO: Technical Publications Manager

Total Pages Sent _____

RE: Reader Response

From: Name _____

Company _____

Address _____

City / State / ZIP / Country _____

Telephone: (_____) _____ - _____ FAX: (_____) _____ - _____

Application (optional):

Would you like a reply? ___Y ___N

Device: 24xx010 Literature Number: DS39016B

Questions:

1. What are the best features of this document?

_____

_____

2. How does this document meet your hardware and software development needs?

_____

_____

3. Do you find the organization of this document easy to follow? If not, why?

_____

_____

4. What additions to the document do you think would enhance the structure and subject?

_____

_____

5. What deletions from the document could be made without affecting the overall usefulness?

_____

_____

6. Is there any incorrect or misleading information (what and where)?

_____

_____

7. How would you improve this document?

_____

_____

 © 1998-2013 Microchip Technology Inc.

PIC16C72 SERIES PRODUCT IDENTIFICATION SYSTEM

To order or obtain information, e.g., on pricing or delivery, refer to the factory or the listed sales office.

PART NO.	-XX	X	/XX	XXX
Device	Frequency Range	Temperature Range	Package	Pattern

Device	PIC16C72(1), PIC16C72T(2) PIC16LC72(1), PIC16LC72T(2) PIC16CR72(1), PIC16CR72T(2) PIC16LCR72(1), PIC16LCR72T(2)		
Frequency Range	02	= 2 MHz	
	04	= 4 MHz	
	10	= 10 MHz	
	20	= 20 MHz	
Temperature Range	b(3)	= 0°C to 70°C	(Commercial)
	I	= -40°C to +85°C	(Industrial)
	E	= -40°C to +125°C	(Extended)
Package	JW	= Ceramic Dual In-Line Package with Window	
	SO	= Small Outline - 300 mil	
	SP	= Skinny PDIP	
	SS	= Shrink Samll Outline Package - 209 mil	
Pattern	3-digit Pattern Code for QTP, ROM (blank otherwise)		

Examples:

a) PIC16C72 -04/P 301 = Commercial temp., PDIP package, 4 MHz, normal VDD limits, QTP pattern #301.

b) PIC16LC72 - 04I/SO = Industrial temp., SOIC package, 200 kHz, Extended VDD limits.

c) PIC16CR72 - 10I/P = ROM program memory, Industrial temp., PDIP package, 10MHz, normal VDD limits.

Note 1: C= CMOS
CR= CMOS ROM
LC= Low Power CMOS
LCR= ROM Version, Extended Vdd range

2: T = in tape and reel - SOIC, SSOP packages only.

3: b = blank

* JW Devices are UV erasable and can be programmed to any device configuration. JW Devices meet the electrical requirement of each oscillator type (including LC devices).

SALES AND SUPPORT

Data Sheets

Products supported by a preliminary Data Sheet may have an errata sheet describing minor operational differences and recommended workarounds. To determine if an errata sheet exists for a particular device, please contact one of the following:

1. Your local Microchip sales office (see last page)
2. The Microchip's Bulletin Board, via your local CompuServe number (CompuServe membership NOT required).

Please specify which device, revision of silicon and Data Sheet (include Literature #) you are using.

 © 1998-2013 Microchip Technology Inc.

Note the following details of the code protection feature on Microchip devices:

- Microchip products meet the specification contained in their particular Microchip Data Sheet.
- Microchip believes that its family of products is one of the most secure families of its kind on the market today, when used in the intended manner and under normal conditions.
- There are dishonest and possibly illegal methods used to breach the code protection feature. All of these methods, to our knowledge, require using the Microchip products in a manner outside the operating specifications contained in Microchip's Data Sheets. Most likely, the person doing so is engaged in theft of intellectual property.
- Microchip is willing to work with the customer who is concerned about the integrity of their code.
- Neither Microchip nor any other semiconductor manufacturer can guarantee the security of their code. Code protection does not mean that we are guaranteeing the product as "unbreakable."

Code protection is constantly evolving. We at Microchip are committed to continuously improving the code protection features of our products. Attempts to break Microchip's code protection feature may be a violation of the Digital Millennium Copyright Act. If such acts allow unauthorized access to your software or other copyrighted work, you may have a right to sue for relief under that Act.

Information contained in this publication regarding device applications and the like is provided only for your convenience and may be superseded by updates. It is your responsibility to ensure that your application meets with your specifications. MICROCHIP MAKES NO REPRESENTATIONS OR WARRANTIES OF ANY KIND WHETHER EXPRESS OR IMPLIED, WRITTEN OR ORAL, STATUTORY OR OTHERWISE, RELATED TO THE INFORMATION, INCLUDING BUT NOT LIMITED TO ITS CONDITION, QUALITY, PERFORMANCE, MERCHANTABILITY OR FITNESS FOR PURPOSE**.** Microchip disclaims all liability arising from this information and its use. Use of Microchip devices in life support and/or safety applications is entirely at the buyer's risk, and the buyer agrees to defend, indemnify and hold harmless Microchip from any and all damages, claims, suits, or expenses resulting from such use. No licenses are conveyed, implicitly or otherwise, under any Microchip intellectual property rights.

QUALITY MANAGEMENT SYSTEM
CERTIFIED BY DNV
═ ISO/TS 16949 ═

Trademarks

The Microchip name and logo, the Microchip logo, dsPIC, FlashFlex, KEELOQ, KEELOQ logo, MPLAB, PIC, PICmicro, PICSTART, PIC^{32} logo, rfPIC, SST, SST Logo, SuperFlash and UNI/O are registered trademarks of Microchip Technology Incorporated in the U.S.A. and other countries.

FilterLab, Hampshire, HI-TECH C, Linear Active Thermistor, MTP, SEEVAL and The Embedded Control Solutions Company are registered trademarks of Microchip Technology Incorporated in the U.S.A.

Silicon Storage Technology is a registered trademark of Microchip Technology Inc. in other countries.

Analog-for-the-Digital Age, Application Maestro, BodyCom, chipKIT, chipKIT logo, CodeGuard, dsPICDEM, dsPICDEM.net, dsPICworks, dsSPEAK, ECAN, ECONOMONITOR, FanSense, HI-TIDE, In-Circuit Serial Programming, ICSP, Mindi, MiWi, MPASM, MPF, MPLAB Certified logo, MPLIB, MPLINK, mTouch, Omniscient Code Generation, PICC, PICC-18, PICDEM, PICDEM.net, PICkit, PICtail, REAL ICE, rfLAB, Select Mode, SQI, Serial Quad I/O, Total Endurance, TSHARC, UniWinDriver, WiperLock, ZENA and Z-Scale are trademarks of Microchip Technology Incorporated in the U.S.A. and other countries.

SQTP is a service mark of Microchip Technology Incorporated in the U.S.A.

GestIC and ULPP are registered trademarks of Microchip Technology Germany II GmbH & Co. & KG, a subsidiary of Microchip Technology Inc., in other countries.

All other trademarks mentioned herein are property of their respective companies.

© 1998-2013, Microchip Technology Incorporated, Printed in the U.S.A., All Rights Reserved.

Printed on recycled paper.

ISBN: 9781620769669

Microchip received ISO/TS-16949:2009 certification for its worldwide headquarters, design and wafer fabrication facilities in Chandler and Tempe, Arizona; Gresham, Oregon and design centers in California and India. The Company's quality system processes and procedures are for its PIC® MCUs and dsPIC® DSCs, KEELOQ® code hopping devices, Serial EEPROMs, microperipherals, nonvolatile memory and analog products. In addition, Microchip's quality system for the design and manufacture of development systems is ISO 9001:2000 certified.

Worldwide Sales and Service

AMERICAS

Corporate Office
2355 West Chandler Blvd.
Chandler, AZ 85224-6199
Tel: 480-792-7200
Fax: 480-792-7277
Technical Support:
http://www.microchip.com/support
Web Address:
www.microchip.com

Atlanta
Duluth, GA
Tel: 678-957-9614
Fax: 678-957-1455

Boston
Westborough, MA
Tel: 774-760-0087
Fax: 774-760-0088

Chicago
Itasca, IL
Tel: 630-285-0071
Fax: 630-285-0075

Cleveland
Independence, OH
Tel: 216-447-0464
Fax: 216-447-0643

Dallas
Addison, TX
Tel: 972-818-7423
Fax: 972-818-2924

Detroit
Farmington Hills, MI
Tel: 248-538-2250
Fax: 248-538-2260

Indianapolis
Noblesville, IN
Tel: 317-773-8323
Fax: 317-773-5453

Los Angeles
Mission Viejo, CA
Tel: 949-462-9523
Fax: 949-462-9608

Santa Clara
Santa Clara, CA
Tel: 408-961-6444
Fax: 408-961-6445

Toronto
Mississauga, Ontario, Canada
Tel: 905-673-0699
Fax: 905-673-6509

ASIA/PACIFIC

Asia Pacific Office
Suites 3707-14, 37th Floor
Tower 6, The Gateway
Harbour City, Kowloon
Hong Kong
Tel: 852-2401-1200
Fax: 852-2401-3431

Australia - Sydney
Tel: 61-2-9868-6733
Fax: 61-2-9868-6755

China - Beijing
Tel: 86-10-8569-7000
Fax: 86-10-8528-2104

China - Chengdu
Tel: 86-28-8665-5511
Fax: 86-28-8665-7889

China - Chongqing
Tel: 86-23-8980-9588
Fax: 86-23-8980-9500

China - Hangzhou
Tel: 86-571-2819-3187
Fax: 86-571-2819-3189

China - Hong Kong SAR
Tel: 852-2943-5100
Fax: 852-2401-3431

China - Nanjing
Tel: 86-25-8473-2460
Fax: 86-25-8473-2470

China - Qingdao
Tel: 86-532-8502-7355
Fax: 86-532-8502-7205

China - Shanghai
Tel: 86-21-5407-5533
Fax: 86-21-5407-5066

China - Shenyang
Tel: 86-24-2334-2829
Fax: 86-24-2334-2393

China - Shenzhen
Tel: 86-755-8864-2200
Fax: 86-755-8203-1760

China - Wuhan
Tel: 86-27-5980-5300
Fax: 86-27-5980-5118

China - Xian
Tel: 86-29-8833-7252
Fax: 86-29-8833-7256

China - Xiamen
Tel: 86-592-2388138
Fax: 86-592-2388130

China - Zhuhai
Tel: 86-756-3210040
Fax: 86-756-3210049

ASIA/PACIFIC

India - Bangalore
Tel: 91-80-3090-4444
Fax: 91-80-3090-4123

India - New Delhi
Tel: 91-11-4160-8631
Fax: 91-11-4160-8632

India - Pune
Tel: 91-20-2566-1512
Fax: 91-20-2566-1513

Japan - Osaka
Tel: 81-6-6152-7160
Fax: 81-6-6152-9310

Japan - Tokyo
Tel: 81-3-6880- 3770
Fax: 81-3-6880-3771

Korea - Daegu
Tel: 82-53-744-4301
Fax: 82-53-744-4302

Korea - Seoul
Tel: 82-2-554-7200
Fax: 82-2-558-5932 or
82-2-558-5934

Malaysia - Kuala Lumpur
Tel: 60-3-6201-9857
Fax: 60-3-6201-9859

Malaysia - Penang
Tel: 60-4-227-8870
Fax: 60-4-227-4068

Philippines - Manila
Tel: 63-2-634-9065
Fax: 63-2-634-9069

Singapore
Tel: 65-6334-8870
Fax: 65-6334-8850

Taiwan - Hsin Chu
Tel: 886-3-5778-366
Fax: 886-3-5770-955

Taiwan - Kaohsiung
Tel: 886-7-213-7828
Fax: 886-7-330-9305

Taiwan - Taipei
Tel: 886-2-2508-8600
Fax: 886-2-2508-0102

Thailand - Bangkok
Tel: 66-2-694-1351
Fax: 66-2-694-1350

EUROPE

Austria - Wels
Tel: 43-7242-2244-39
Fax: 43-7242-2244-393

Denmark - Copenhagen
Tel: 45-4450-2828
Fax: 45-4485-2829

France - Paris
Tel: 33-1-69-53-63-20
Fax: 33-1-69-30-90-79

Germany - Munich
Tel: 49-89-627-144-0
Fax: 49-89-627-144-44

Italy - Milan
Tel: 39-0331-742611
Fax: 39-0331-466781

Netherlands - Drunen
Tel: 31-416-690399
Fax: 31-416-690340

Spain - Madrid
Tel: 34-91-708-08-90
Fax: 34-91-708-08-91

UK - Wokingham
Tel: 44-118-921-5869
Fax: 44-118-921-5820

11/29/12

© 1998-2013 Microchip Technology Inc.