FNB80460T3

Motion SPM® 8 Series

FNB80460T3 is a Motion SPM 8 module providing a fully−featured, high−performance inverter output stage for AC Induction, BLDC, and PMSM motors. These modules integrate optimized gate drive of the built−in IGBTs to minimize EMI and losses, while also providing multiple on−module protection features including under−voltage lockouts, inter−lock function, over−current shutdown, thermal monitoring of drive IC, and fault reporting. The built−in, high−speed HVIC requires only a single supply voltage and translates the incoming logic−level gate inputs to the high−voltage, high−current drive signals required to properly drive the module's robust shortcircuit−rated IGBTs. Separate negative IGBT terminals are available for each phase to support the widest variety of control algorithms.

Features

- UL Certified No. E209204 (UL1557)
- 600 V − 4 A 3−Phase IGBT Inverter Including Control IC for Gate Drive and Protections
- Low−Loss, Short−Circuit Rated IGBTs
- Separate Open−Emitter Pins from Low−Side IGBTs for Three−Phase Current Sensing
- Active−high Interface, works with 3.3 / 5 V Logic, Schmitt−trigger Input
- HVIC for Gate Driving, Under−Voltage and Short−Circuit Current Protection
- Fault Output for Under−Voltage and Short−Circuit Current Protection
- Inter−Lock Function to Prevent Short−Circuit
- Shut−Down Input
- HVIC Temperature−Sensing Built−In for Temperature Monitoring
- Isolation Rating: 1500 V_{rms} / min.

Applications

- Motion Control − Home Appliance / Industrial Motor

Related Resources

- AN−9112 − Smart Power Module, Motion SPM 8 Series User's Guide
- AN−9584 − SPM 8 Package Assembly Guidance for 25L double DIP

Integrated Power Functions

- 600 V − 4 A IGBT Inverter for Three Phase DC / AC Power Conversion (Please refer to Figure 2)

Integrated Drive, Protection and System Control Functions

- For Inverter High−side IGBTs: gate drive circuit, high−voltage isolated high−speed level shifting control circuit Under−Voltage Lock−Out (UVLO) protection (Note: Available bootstrap circuit example is given in Figures 4 and 16)

ON Semiconductor®

www.onsemi.com

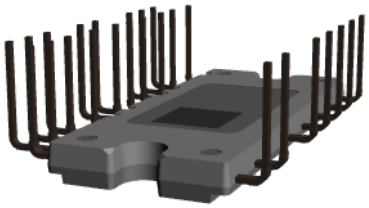

3D Package Drawing
(Click to Activate 3D Content)

SPMFA−A25
CASE MODEZ

MARKING DIAGRAM

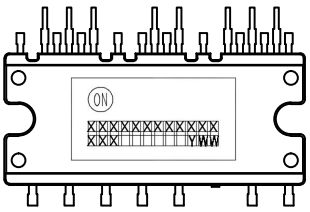

ON	= ON Semiconductor Logo
NB80460T3	= Specific Device Code
XXX	= Lot Number
Y	= Year
WW	= Work Week

ORDERING INFORMATION

See detailed ordering and shipping information on page 9 of this data sheet.

© Semiconductor Components Industries, LLC, 2019

- Control Circuit Under−Voltage Lock−Out (UVLO) protection
- For Inverter Low−side IGBTs: gate drive circuit, Over Curent Pretection(OCP), Short−Circuit Protection (SCP) control supply circuit Under−Voltage Lock−Out (UVLO) protection
- Fault Signaling: corresponding to UVLO (low−side supply) and SC faults
- Input Interface: High−active interface, works with 3.3 / 5 V logic, Schmitt trigger input

PIN CONFIGURATION

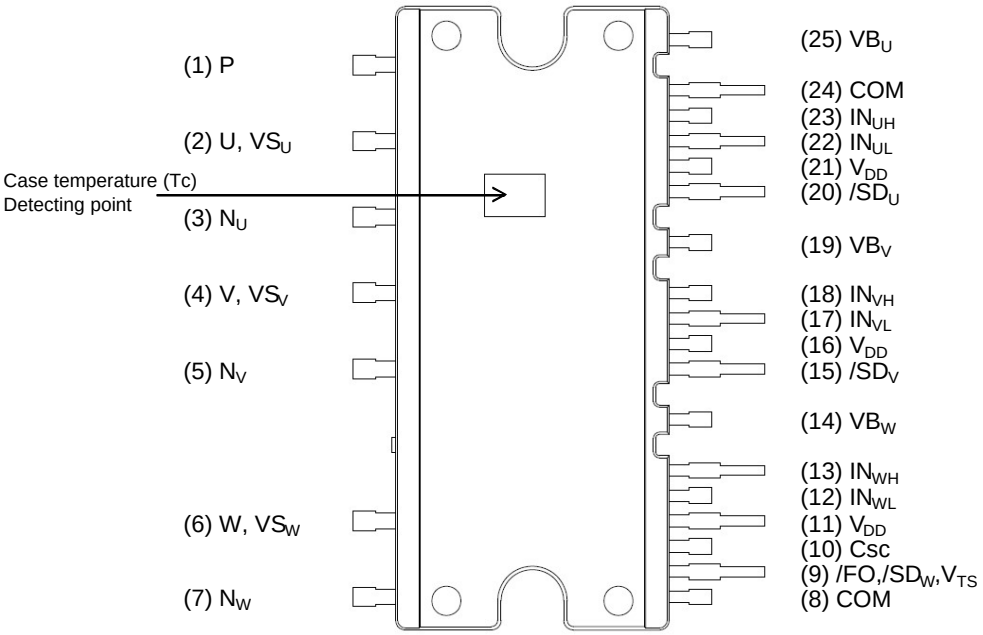

Figure 1. Pin Configuration − Top View

Table 1. PIN DESCRIPTIONS

Pin Number	Pin Name	Pin Description
1	P	Positive DC−Link Input
2	U, VS_U	Output for U Phase
3	N_U	Negative DC−Link Input for U Phase
4	V, VS_V	Output for V Phase
5	N_V	Negative DC−Link Input for V Phase
6	W, VS_W	Output for W Phase
7	N_W	Negative DC−Link Input for W Phase
8	COM	Common Supply Ground
9	/FO, $/SD_W$, V_{TS}	Fault Output, Shut−Down Input for W Phase, Temperature Output of Drive IC
10	C_{SC}	Shut Down Input for Over Current and Short Circuit Protection
11	V_{DD}	Common Bias Voltage for IC and IGBTs Driving
12	IN_{WL}	Signal Input for Low−Side W Phase
13	IN_{WH}	Signal Input for High−Side W Phase

Table 1. PIN DESCRIPTIONS

Pin Number	Pin Name	Pin Description
14	VB_W	High−Side Bias Voltage for W−Phase IGBT Driving
15	$/SD_V$	Shut−Down Input for V Phase
16	V_{DD}	Common Bias Voltage for IC and IGBTs Driving
17	IN_{VL}	Signal Input for Low−Side V Phase
18	IN_{VH}	Signal Input for High−Side V Phase
19	VB_V	High−Side Bias Voltage for V−Phase IGBT Driving
20	$/SD_U$	Shut−Down Input for U Phase
21	V_{DD}	Common Bias Voltage for IC and IGBTs Driving
22	IN_{UL}	Signal Input for Low−Side U Phase
23	IN_{UH}	Signal Input for High−Side U Phase
24	COM	Common Supply Ground
25	VB_U	High−Side Bias Voltage for U−Phase IGBT Driving

INTERNAL EQUIVALENT CIRCUIT AND INPUT/OUTPUT PINS

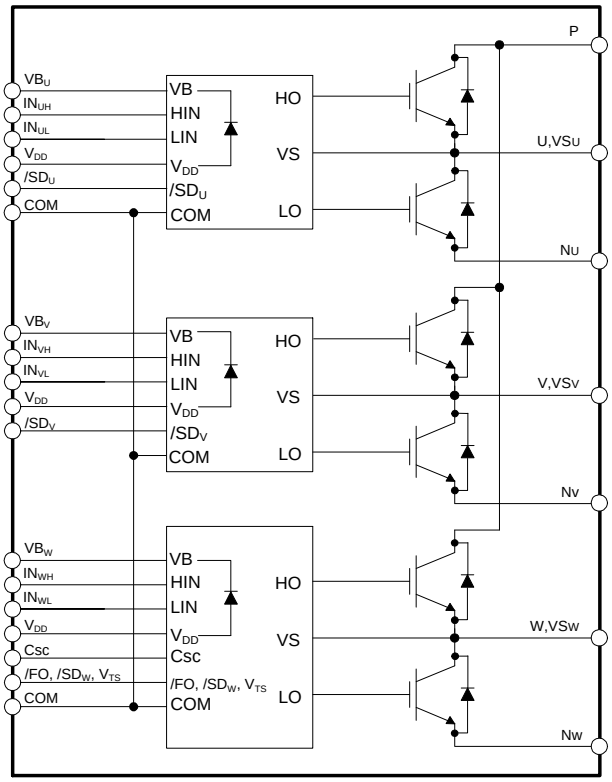

Notes:
1. Inverter high−side is composed of three IGBTs, freewheeling diodes.
2. Inverter low−side is composed of three IGBTs, freewheeling diodes.
3. Inverter power side is composed of four inverter DC−link input terminals and three inverter output terminals.

Figure 2. Internal Block Diagram

Table 2. ABSOLUTE MAXIMUM RATINGS (T_J = 25°C unless otherwise specified)

Symbol	Parameter	Conditions	Rating	Unit
INVERTER PART				
V_{PN}	Supply Voltage	Applied between P − N_U, N_V, N_W	450	V
$V_{PN(Surge)}$	Supply Voltage (Surge)	Applied between P − N_U, N_V, N_W	500	V
V_{CES}	Collector − Emitter Voltage		600	V
± I_C	Each IGBT Collector Current	T_C = 25°C, T_J ≤ 150°C (Note 1)	4	A
± I_{CP}	Each IGBT Collector Current (Peak)	T_C = 25°C, T_J ≤ 150°C, Under 1 ms Pulse Width (Note 1)	8	A
T_J	Operating Junction Temperature		−40 ~ 150	°C
CONTROL PART				
V_{DD}	Control Supply Voltage	Applied between V_{DD} − COM	20	V
V_{BS}	High−Side Control Bias Voltage	Applied between VB_U − VS_U, VB_V − VS_V, VB_W − VS_W	20	V
V_{IN}	Input Signal Voltage	Applied between IN_{UH}, IN_{VH}, IN_{WH}, IN_{UL}, IN_{VL}, IN_{WL} − COM	−0.3 ~ V_{DD} + 0.3	V
V_{FS}	Function Supply Voltage	Applied between /FO, $/SD_W$, V_{TS} − COM	−0.3 ~ V_{DD} + 0.3	V
I_{FO}	Fault Current	Sink Current at /FO, $/SD_W$, V_{TS} pin	2	mA
V_{SC}	Current Sensing Input Voltage	Applied between C_{SC} − COM	−0.3 ~ V_{DD} + 0.3	V
TOTAL SYSTEM				
$V_{PN(PROT)}$	Self Protection Supply Voltage Limit (Short Circuit Protection Capability)	V_{DD} = V_{BS} = 13.5 ~ 16.5 V, T_J = 150°C, Non−Repetitive, < 2 μs	400	V
T_{STG}	Storage Temperature		−40 ~ 125	°C
V_{ISO}	Isolation Voltage Connect Pins to Heat Sink Plate	AC 60 Hz, Sinusoidal, AC 1 Minute, Connection Pins to Heat Sink Plate	1600	Vrms

Stresses exceeding those listed in the Maximum Ratings table may damage the device. If any of these limits are exceeded, device functionality should not be assumed, damage may occur and reliability may be affected.

1. These values had been made an acquisition by the calculation considered to design factor.

Table 3. THERMAL RESISTANCE

Symbol	Parameter	Conditions	Min	Typ	Max	Unit
$R_{th(j-c)Q}$	Junction−to−Case Thermal Resistance (Note 2)	Inverter IGBT part, (Per Module)	–	–	3.65	°C/W
$R_{th(j-c)F}$		Inverter FWDi part, (Per Module)	–	–	4.13	°C/W

2. For the measurement point of case temperature (T_C), please refer to Figure 1.

Table 4. ELECTRICAL CHARACTERISTICS (T_J = 25°C unless otherwise specified.)

Symbol		Parameter	Conditions		Min	Typ	Max	Unit
INVERTER PART								
$V_{CE(SAT)}$		Collector − Emitter Saturation Voltage	$V_{DD} = V_{BS} = 15$ V, $V_{IN} = 5$ V, $I_C = 3$ A	$T_J = 25°C$	−	1.85	2.30	V
				$T_J = 150°C$	−	2.30	−	V
V_F		FWDi Forward Voltage	$V_{IN} = 0$ V, $I_F = 3$ A	$T_J = 25°C$	−	1.95	2.50	V
				$T_J = 150°C$	−	1.85	−	V
HS	t_{ON}	Switching Times	$V_{PN} = 400$ V, $V_{DD} = V_{BS} = 15$ V, $I_C = 4$ A, $T_J = 25°C$ $V_{IN} = 0$ V ↔ 5 V, Inductive load (Note 3)		0.30	0.70	1.10	μs
	$t_{C(ON)}$				−	0.15	0.45	μs
	t_{OFF}				−	0.50	1.00	μs
	$t_{C(OFF)}$				−	0.10	0.40	μs
	t_{rr}				−	0.10	−	μs
LS	t_{ON}		$V_{PN} = 400$ V, $V_{DD} = V_{BS} = 15$ V, $I_C = 4$ A, $T_J = 25°C$ $V_{IN} = 0$ V ↔ 5 V, Inductive load (Note 3)		0.30	0.70	1.10	μs
	$t_{C(ON)}$				−	0.15	0.45	μs
	t_{OFF}				−	0.50	1.00	μs
	$t_{C(OFF)}$				−	0.10	0.40	μs
	t_{rr}				−	0.10	−	μs
I_{CES}		Collector − Emitter Leakage Current	$V_{CE} = V_{CES}$		−	−	1.00	mA

Product parametric performance is indicated in the Electrical Characteristics for the listed test conditions, unless otherwise noted. Product performance may not be indicated by the Electrical Characteristics if operated under different conditions.

3. t_{ON} and t_{OFF} include the propagation delay of the internal drive IC. $t_{C(ON)}$ and $t_{C(OFF)}$ are the switching times of IGBT under the given gate−driving condition internally. For the detailed information, please see Figure 3.

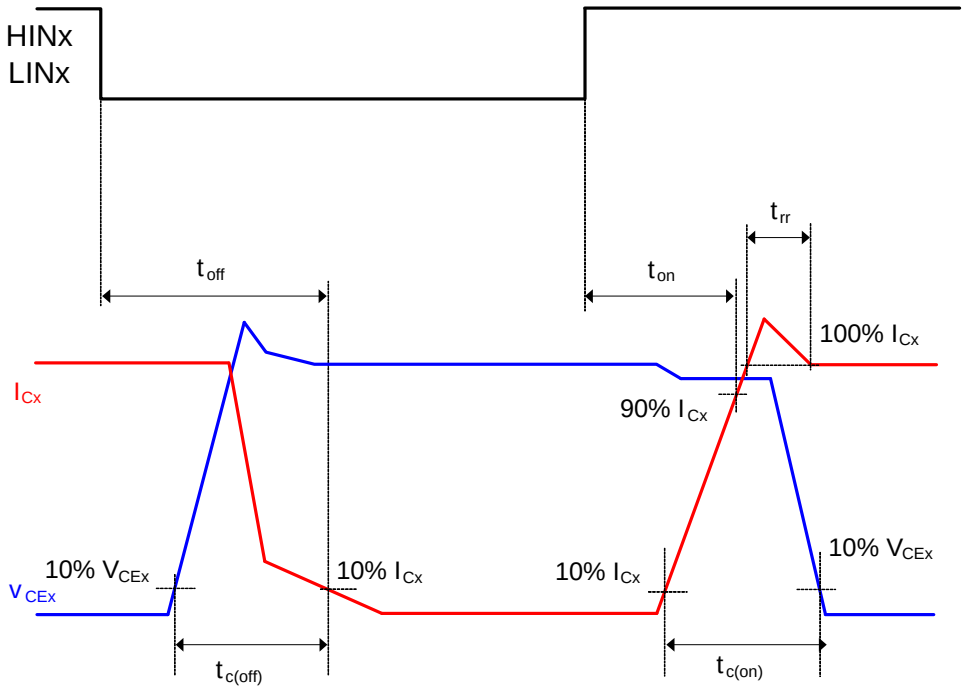

Figure 3. Switching Time

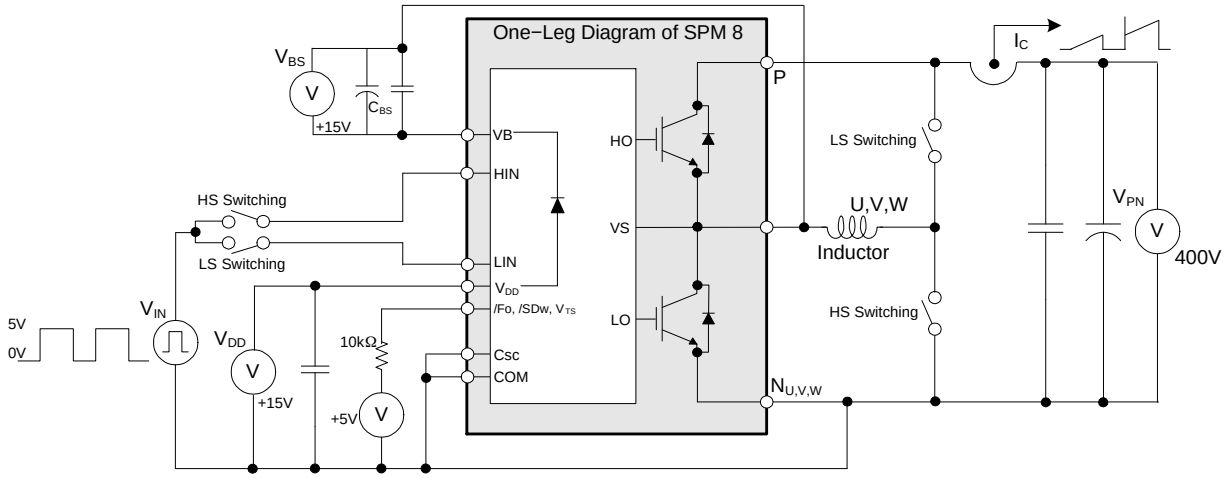

Figure 4. Example Circuit for Switching Test

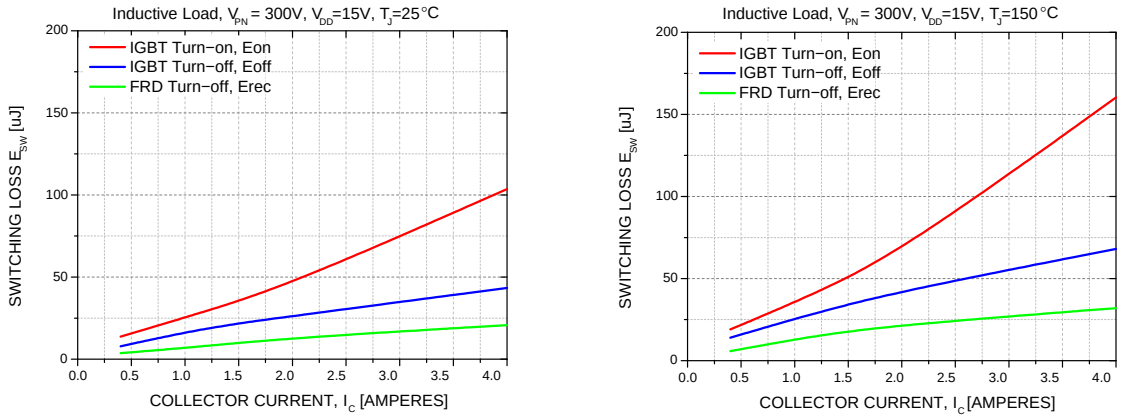

Figure 5. Switching Loss Characteristics

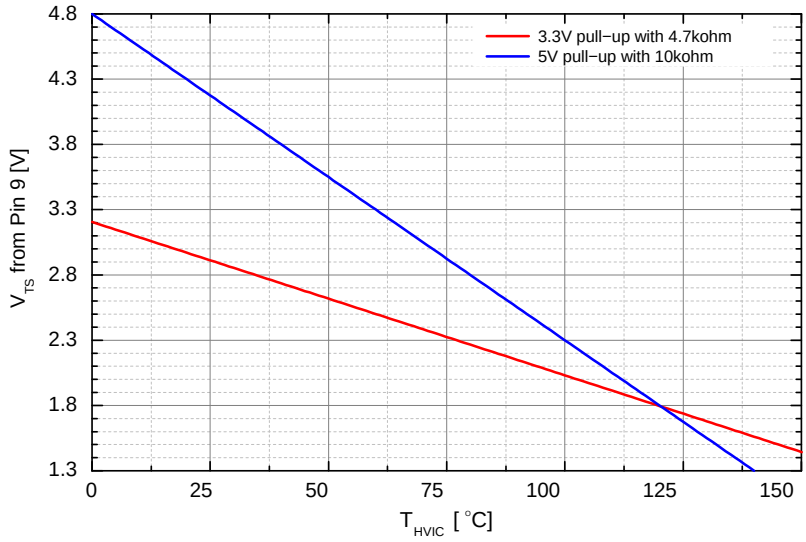

Figure 6. V−T Curve of Temperature Output of IC

Table 5. ELECTRICAL CHARACTERISTICS

Symbol	Parameter	Conditions		Min	Typ	Max	Unit
CONTROL PART							
I_{QDD}	Quiescent V_{DD} Supply Current	V_{DD} = 15 V, ^{IN}(UH,VH,WH,UL,VL,WL) = 0 V	V_{DD} − COM	−	−	1.7	mA
I_{PDD}	Operating V_{DD} Supply Current	V_{DD} = 15 V, f_{PWM} = 20 kHz, duty = 50%, applied to one PWM signal input	V_{DD} − COM	−	−	1.8	mA
I_{QBS}	Quiescent V_{BS} Supply Current	V_{BS} = 15 V, $IN_{(UH, VH, WH)}$ = 0 V	$V_{B(U)}$ − $V_{S(U)}$, $V_{B(V)}$ − $V_{S(V)}$, $V_{B(W)}$ − $V_{S(W)}$	−	−	100	μA
I_{PBS}	Operating V_{BS} Supply Current	V_{DD} = V_{BS} = 15 V, f_{PWM} = 20 kHz, duty = 50%, applied to one PWM signal input for high − side	$V_{B(U)}$ − $V_{S(U)}$, $V_{B(V)}$ − $V_{S(V)}$, $V_{B(W)}$ − $V_{S(W)}$	−	−	300	μA
V_{FOH}	Fault Output Voltage	V_{SC} = 0 V, V_F Circuit: 10 kΩ to 5 V Pull−up		3.81	−	−	V
V_{FOL}		V_{SC} = 1 V, V_F Circuit: 10 kΩ to 5 V Pull−up		−	−	0.5	V
$V_{SC(ref)}$	Short−Circuit Trip Level	V_{DD} = 15 V (Note 4)		0.46	0.49	0.52	V
UV_{DDD}	Supply Circuit Under−Voltage Protection	Detection level		10.0	11.5	13.0	V
UV_{DDR}		Reset level		10.5	12.0	13.5	V
UV_{BSD}		Detection level		9.5	11.0	12.5	V
UV_{BSR}		Reset level		10.0	11.5	13.0	V
I_{FO_T}	HVIC Temperature Sensing Current	V_{DD} = V_{BS} = 15 V, T_{HVIC} = 25°C		−	82.5	−	μA
		V_{DD} = V_{BS} = 15 V, T_{HVIC} = 75°C		−	207.5	−	μA
V_{FO_T}	HVIC Temperature Sensing Voltage See Figure 7	V_{DD} = V_{BS} = 15 V, T_{HVIC} = 25°C, 10 kΩ to 5 V Pull−up		−	4.18	−	V
		V_{DD} = V_{BS} = 15 V, T_{HVIC} = 75°C, 10 kΩ to 5 V Pull−up		−	2.93	−	V
t_{FOD}	Fault−Out Pulse Width			40	−	−	μs
V_{FSDR}	Shut−down Reset level	Applied between /FO − COM		−	−	2.4	V
V_{FSDD}	Shut−down Detection level			0.8	−	−	V
$V_{IN(ON)}$	ON Threshold Voltage	Applied between $IN_{(UH)}$, $IN_{(VH)}$, $IN_{(WH)}$, $IN_{(UL)}$, $IN_{(VL)}$, $IN_{(WL)}$ − COM		−	−	2.4	V
$V_{IN(OFF)}$	OFF Threshold Voltage			0.8	−	−	V
BOOTSTRAP DIODE PART							
R_{BS}	Bootstrap Diode Resistance	V_{DD} = 15 V, T_J = 25°C		−	280	−	Ω

Product parametric performance is indicated in the Electrical Characteristics for the listed test conditions, unless otherwise noted. Product performance may not be indicated by the Electrical Characteristics if operated under different conditions.

4. Short−circuit current protection function is for all six IGBTs if the /FO, $/SD_W$, V_{TS} pin is connected to $/SD_x$ pins.

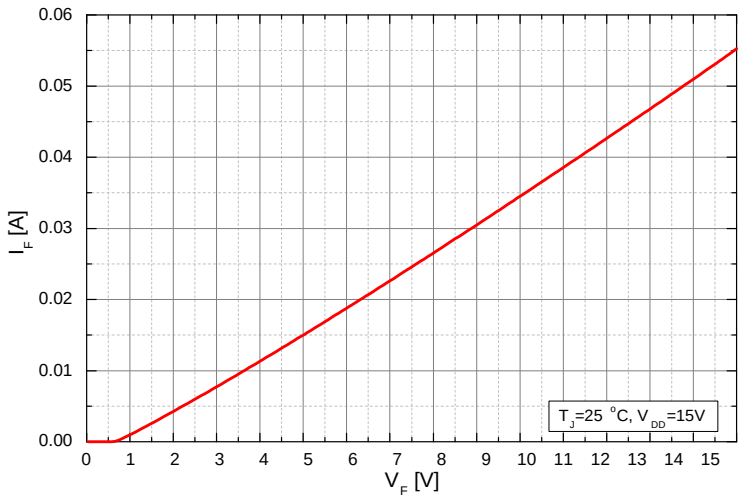

Figure 7. Built−In Bootstrap Diode Characteristics

Table 6. RECOMMENDED OPERATING CONDITIONS

Symbol	Parameter	Conditions	Min	Typ	Max	Unit
V_{PN}	Supply Voltage	Applied between P − N_U, N_V, N_W	−	300	400	V
V_{DD}	Control Supply Voltage	Applied between V_{DD} − COM	14.0	15	16.5	V
V_{BS}	High − Side Bias Voltage	Applied between VB_U − VS_U, VB_V −VS_V, VB_W − VS_W	13.0	15	18.5	V
dV_{DD} / dt, dV_{BS} / dt	Control Supply Variation		−1	−	1	V/μs
t_{dead}	Blanking Time for Preventing Arm − Short	For each input signal	0.5	−	−	μs
V_{SEN}	Voltage for Current Sensing	Applied between N_U, N_V, N_W − COM (Including surge voltage)	−4		4	V
$P_{WIN(ON)}$	Minimun Input Pulse Width	V_{DD} = V_{BS} = 15 V, I_C ≤ 10 A, Wiring Inductance between $N_{U, V, W}$ and DC Link N < 10nH (Note 5)	0.7	−	−	μs
$P_{WIN(OFF)}$			0.7	−	−	

Functional operation above the stresses listed in the Recommended Operating Ranges is not implied. Extended exposure to stresses beyond the Recommended Operating Ranges limits may affect device reliability.

5. This product might not make response if input pulse width is less than the recommended value.

Table 7. MECHANICAL CHARACTERISTICS AND RATINGS

Parameter	Conditions		Value			Unit
			Min	Typ	Max	
Device Flatness	See Figure 8		0	−	+120	μm
Mounting Torque	Mounting Screw: M3 See Figure 9 (Note 6, 7)	Recommended 0.62 N • m	0.51	0.62	0.72	N • m
Weight			−	15.00	−	g

6. Do not make over torque when mounting screws. Much mounting torque may cause package cracks, as well as bolts and Al heat−sink destruction.
7. Avoid one side tightening stress. Figure 9 shows the recommended torque order for mounting screws. Uneven mounting can cause the DBC substrate of package to be damaged. The pre−screwing torque is set to 20 ~ 30% of maximum torque rating.

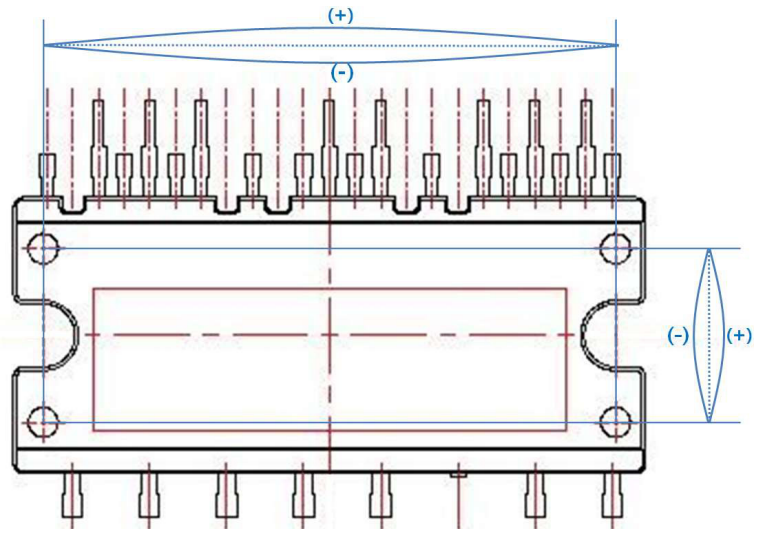

Figure 8. Flatness Measurement Position

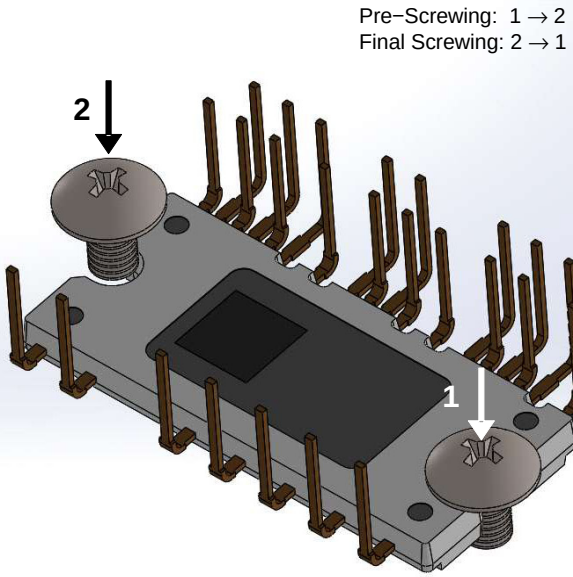

Figure 9. Mounting Screws Torque Order

PACKAGE MARKING AND ORDERING INFORMATION

Device	Device Marking	Package	Shipping
FNB80460T3	NB80460T3	SPMFA−A25	15 Units / Rail

TIME CHARTS OF PROTECTIVE FUNCTION

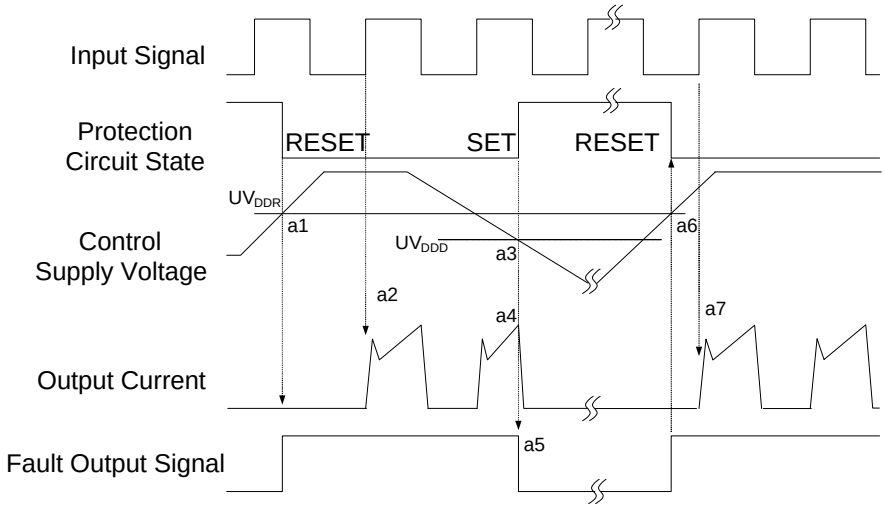

a1: Control supply voltage rises: after the voltage rises UV_{DDR}, the circuits start to operate when next input is applied.
a2: Normal operation: IGBT ON and carrying current.
a3: Under−voltage detection (UV_{DDD}).
a4: IGBT OFF in spite of control input condition.
a5: Fault output operation starts.
a6: Under−voltage reset (UV_{DDR}).
a7: Normal operation: IGBT ON and carrying current.

Figure 10. Under−Voltage Protection (Low−Side)

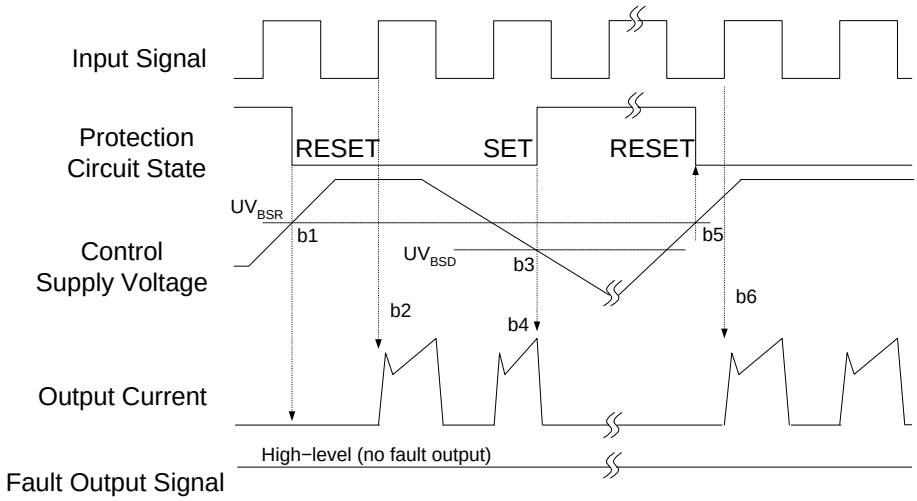

b1: Control supply voltage rises: after the voltage reaches UV_{BSR}, the circuits start to operate when next input is applied.
b2: Normal operation: IGBT ON and carrying current.
b3: Under−voltage detection (UV_{BSD}).
b4: IGBT OFF in spite of control input condition, but there is no fault output signal.
b5: Under−voltage reset (UV_{BSR}).
b6: Normal operation: IGBT ON and carrying current.

Figure 11. Under−Voltage Protection (High−Side)

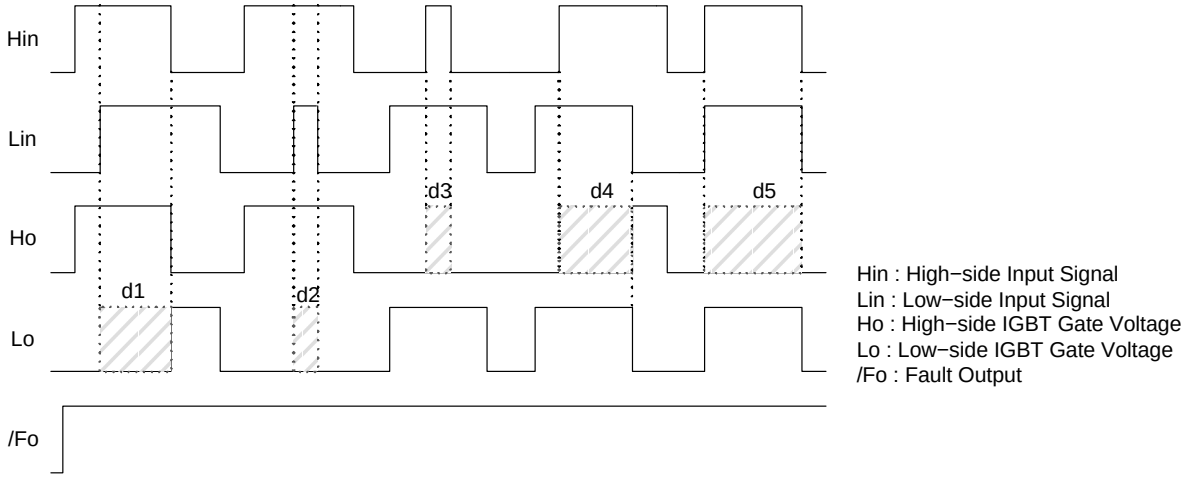

d1: High Side First − Input − First − Output Mode
d2: Low Side Noise Mode: No LO
d3: High Side Noise Mode: No HO
d4: Low Side First − Input − First − Output Mode
d5: IN − Phase Mode: No HO

Figure 12. Inter−Lock Function

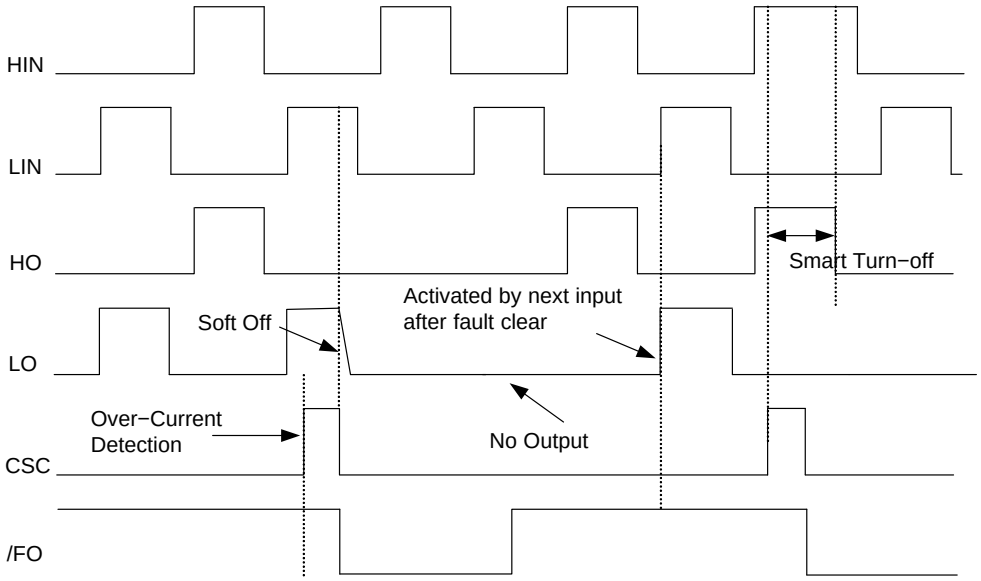

HIN : High−side Input Signal
LIN : Low−side Input Signal
HO : High−Side Output Signal
LO : Low−Side Output Signal
C_{SC} : Over Current Detection Input
/FO : Fault Out Function

Figure 13. Fault−Out Function by Over Current Protection

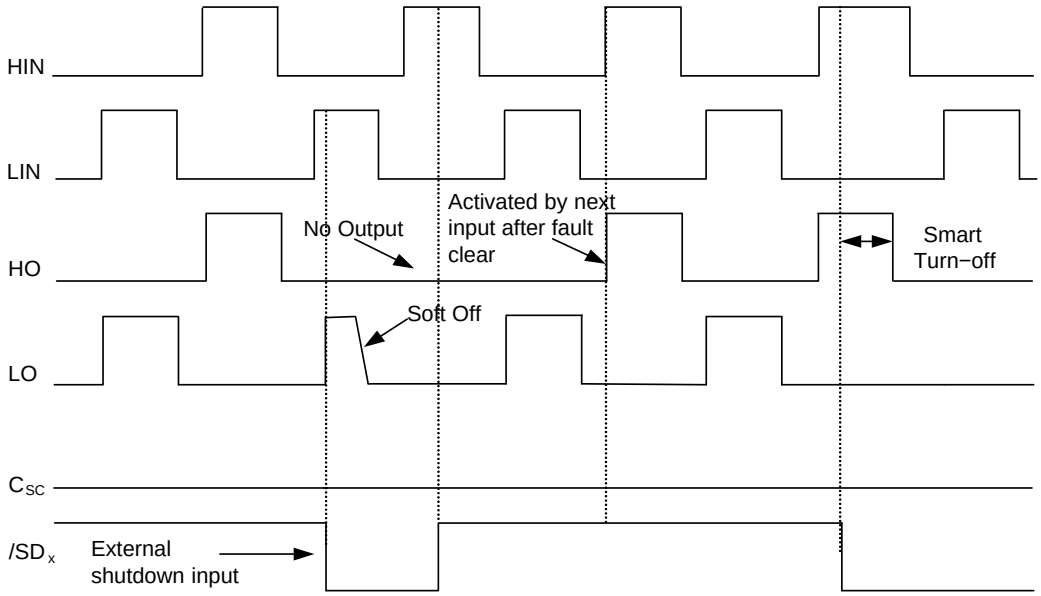

HIN : High−side Input Signal

LIN : Low−side Input Signal

HO : High−Side Output Signal

LO : Low−Side Output Signal

C_{SC} : Over Current Detection Input

$/SD_x$: Shutdown Input Function

Figure 14. Shutdown Input Function by External Command

INPUT/OUTPUT INTERFACE CIRCUIT

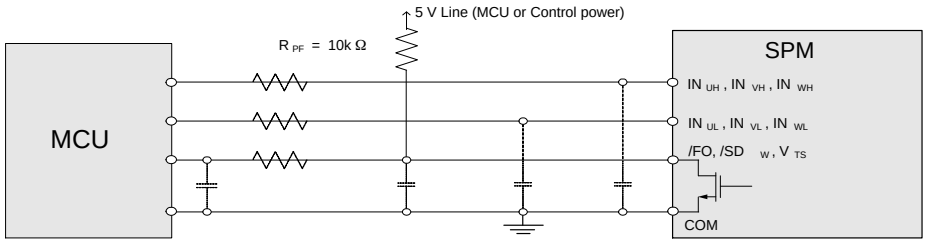

NOTE: RC coupling at each input (parts shown dotted) might change depending on the PWM control scheme used in the application and the wiring impedance of the application's printed circuit board. The input signal section of the SPM 8 product integrates 5 kΩ (typ.) pull−down resistor. Therefore, when using an external filtering resistor, please pay attention to the signal voltage drop at input terminal.

Figure 15. Recommended MCU I/O Interface Circuit

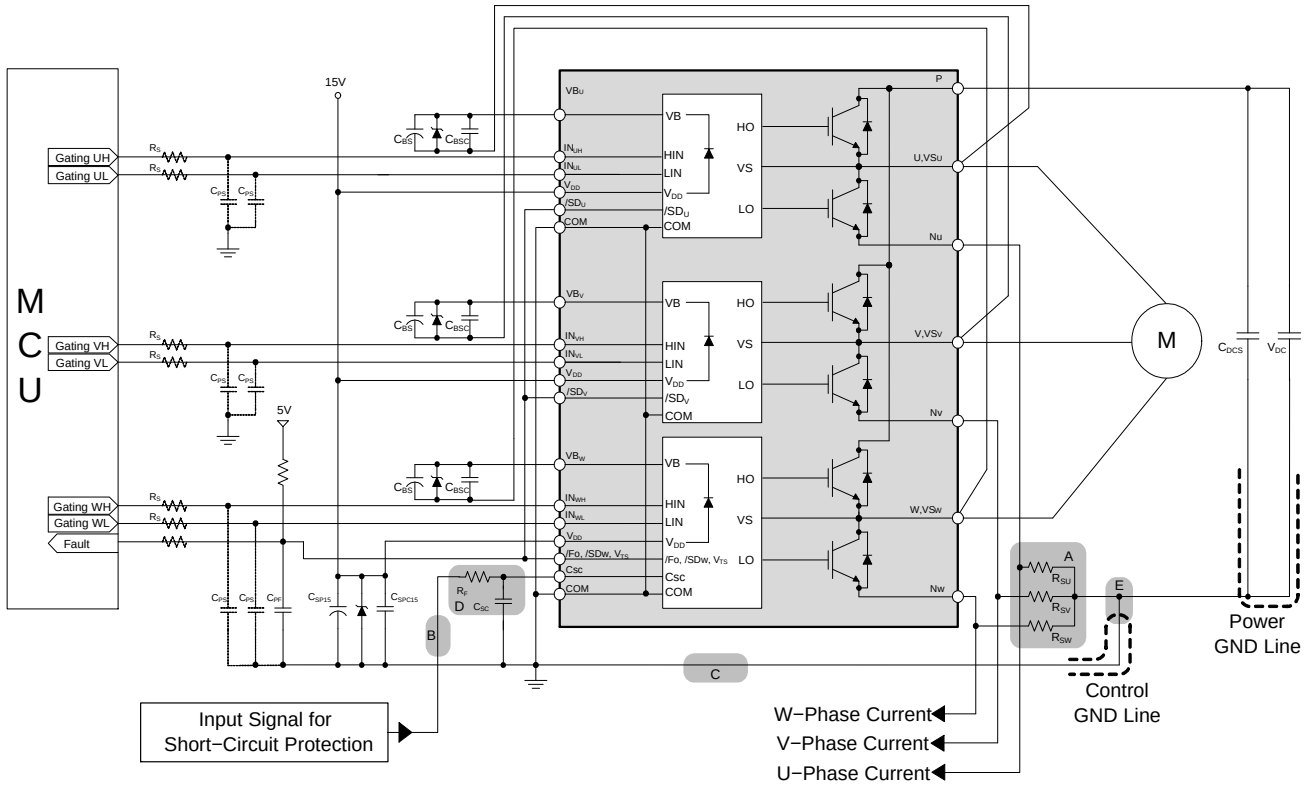

Figure 16. Typical Application Circuit

NOTES:

8. To avoid malfunction, the wiring of each input should be as short as possible (Less than 2 ~ 3 cm).
9. /FO is open−drain type. This signal line should be pulled up to the positive side of the MCU or control power supply with a resistor that makes I_{FO} up to 2 mA. (Figure 15.)
10. C_{SP15} of around seven times larger than bootstrap capacitor C_{BS} is recommended.
11. Input signal is active−HIGH type. There is a 5 kΩ resistor inside the IC to pull down each input signal line to GND. RC coupling circuits are recommended for the prevention of input signal oscillation. R_SC_{PS} time constant should be selected in the range 50 ~ 150 ns (Recommended R_S = 100 Ω, C_{PS} = 1 nF).
12. Each wiring pattern inductance of A point should be minimized (Recommend less than 10nH). Use the shunt resistor $R_{S(U/V/W)}$ of surface mounted (SMD) type to reduce wiring inductance. To prevent malfunction, wiring of point E should be connected to the terminal of the shunt resistor $R_{S(U/V/W)}$ as close as possible.
13. To prevent errors of the protection function, the wiring of B, C, and D point should be as short as possible.
14. In the short−circuit current protection circuit, please select the R_FC_{SC} time constant in the range 1.5 ~ 2 μs. Do enough evaluation on the real system because short−circuit protection time may vary wiring pattern layout and value of the R_F and C_{SC} time constant.
15. The connection between control GND line and power GND line which includes the N_U, N_V, N_W must be connected to only one point. Please do not connect the control GND to the power GND by the broad pattern. Also, the wiring distance between control GND and power GND should be as short as possible.
16. Each capacitor should be mounted as close to the pins of the Motion SPM 8 product as possible.
17. To prevent surge destruction, the wiring between the smoothing capacitor and the P and GND pins should be as short as possible. The use of a high frequency non−inductive capacitor of around 0.1 ~ 0.22 μF between the P and GND pins is recommended.
18. Relays are used in almost every systems of electrical equipments of home appliances. In these cases, there should be sufficient distance between the CPU and the relays.
19. The zener diode or transient voltage suppressor should be adapted for the protection of ICs from the surge destruction between each pair of control supply terminals (Recommended zener diode is 22 V / 1 W, which has the lower zener impedance characteristic than about 15 Ω).
20. Please choose the electrolytic capacitor with good temperature characteristic in C_{BS}. Also, choose 0.1 ~ 0.2 μF R−category ceramic capacitors with good temperature and frequency characteristics in C_{BSC}.
21. For the detailed information, please refer to the application notes.
22. /FO and /SD must be connected as short as possible.

SPM is a registered trademark of Semiconductor Components Industries, LLC (SCILLC) or its subsidiaries in the United States and/or other countries.

SPMFA–A25 / 25LD, FULL PACK, DIP TYPE, SPM8 SERIES
CASE MODEZ
ISSUE O

DATE 31 JAN 2017

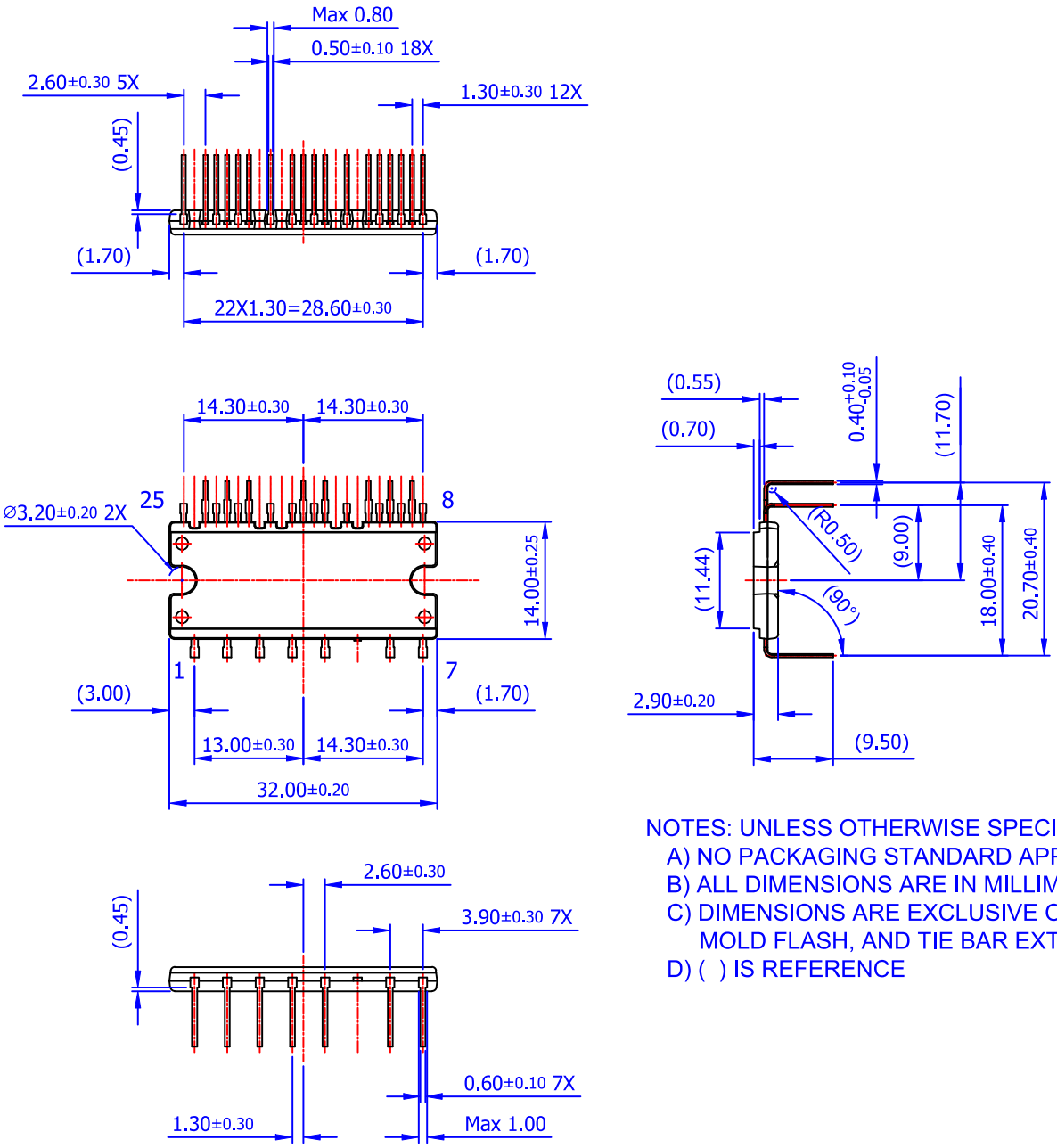

NOTES: UNLESS OTHERWISE SPECIFIED
A) NO PACKAGING STANDARD APPLIES
B) ALL DIMENSIONS ARE IN MILLIMETERS
C) DIMENSIONS ARE EXCLUSIVE OF BURRS, MOLD FLASH, AND TIE BAR EXTRUSIONS
D) ( ) IS REFERENCE

DOCUMENT NUMBER:	**98AON13572G**	Electronic versions are uncontrolled except when accessed directly from the Document Repository. Printed versions are uncontrolled except when stamped "CONTROLLED COPY" in red.
DESCRIPTION:	**SPMFA–A25 / 25LD, FULL PACK, DIP TYPE, SPM8 SERIES**	**PAGE 1 OF 1**

ON Semiconductor and ON are trademarks of Semiconductor Components Industries, LLC dba ON Semiconductor or its subsidiaries in the United States and/or other countries. ON Semiconductor reserves the right to make changes without further notice to any products herein. ON Semiconductor makes no warranty, representation or guarantee regarding the suitability of its products for any particular purpose, nor does ON Semiconductor assume any liability arising out of the application or use of any product or circuit, and specifically disclaims any and all liability, including without limitation special, consequential or incidental damages. ON Semiconductor does not convey any license under its patent rights nor the rights of others.

© Semiconductor Components Industries, LLC, 2019

onsemi, onsemi, and other names, marks, and brands are registered and/or common law trademarks of Semiconductor Components Industries, LLC dba "**onsemi**" or its affiliates and/or subsidiaries in the United States and/or other countries. **onsemi** owns the rights to a number of patents, trademarks, copyrights, trade secrets, and other intellectual property. A listing of **onsemi**'s product/patent coverage may be accessed at www.onsemi.com/site/pdf/Patent−Marking.pdf. **onsemi** reserves the right to make changes at any time to any products or information herein, without notice. The information herein is provided "as−is" and **onsemi** makes no warranty, representation or guarantee regarding the accuracy of the information, product features, availability, functionality, or suitability of its products for any particular purpose, nor does **onsemi** assume any liability arising out of the application or use of any product or circuit, and specifically disclaims any and all liability, including without limitation special, consequential or incidental damages. Buyer is responsible for its products and applications using **onsemi** products, including compliance with all laws, regulations and safety requirements or standards, regardless of any support or applications information provided by **onsemi**. "Typical" parameters which may be provided in **onsemi** data sheets and/or specifications can and do vary in different applications and actual performance may vary over time. All operating parameters, including "Typicals" must be validated for each customer application by customer's technical experts. **onsemi** does not convey any license under any of its intellectual property rights nor the rights of others. **onsemi** products are not designed, intended, or authorized for use as a critical component in life support systems or any FDA Class 3 medical devices or medical devices with a same or similar classification in a foreign jurisdiction or any devices intended for implantation in the human body. Should Buyer purchase or use **onsemi** products for any such unintended or unauthorized application, Buyer shall indemnify and hold **onsemi** and its officers, employees, subsidiaries, affiliates, and distributors harmless against all claims, costs, damages, and expenses, and reasonable attorney fees arising out of, directly or indirectly, any claim of personal injury or death associated with such unintended or unauthorized use, even if such claim alleges that **onsemi** was negligent regarding the design or manufacture of the part. **onsemi** is an Equal Opportunity/Affirmative Action Employer. This literature is subject to all applicable copyright laws and is not for resale in any manner.

PUBLICATION ORDERING INFORMATION

LITERATURE FULFILLMENT:
Email Requests to: orderlit@onsemi.com

onsemi Website: www.onsemi.com

TECHNICAL SUPPORT
North American Technical Support:
Voice Mail: 1 800−282−9855 Toll Free USA/Canada
Phone: 011 421 33 790 2910

Europe, Middle East and Africa Technical Support:
Phone: 00421 33 790 2910
For additional information, please contact your local Sales Representative

◊